QUAD 405
POWER AMPLIFIER
Service Data

The Acoustical Manufacturing Co. Ltd
St Peters Road, Huntingdon, Cambs, PE18 7DB, England
Telephone: 0480 52561 Telex 32348 QUAD G

Contents *page*

Circuit Description	3
Test Equipment	4
Disconnecting Clamp Circuits	4
Amplifier Circuit Testing	5
Clamp Circuit Testing	5
Fault Finding	6
Modifications	8
Clamp Circuit	9
Replacing a Clamp Board	9
Conversion of a 405 to a Mono 180 watt amplifier	10
Replacing Transformer	11
Replacing Amplifier Modules	11
QUAD 405-2	12
Assembly Diagram	opp. 12
Amplifier Board Layout Diagram M12368 ISS 9 and 10	rev. 15, 16
Amplifier Board Layout Diagram M12565 ISS 3	rev. 17
Circuit Diagram 2 amplifier boards M12368 ISS 5 and 6	13
Circuit Diagram 3 amplifier board M12368 ISS 7	14
Circuit Diagram 4 amplifier board M12368 ISS 9	15
Circuit Diagram 5 amplifier board M12368 ISS 9 and 10	16
Circuit Diagram 6 amplifier board M12565 ISS 3	17
Circuit Diagram 7 amplifier board M12565 ISS 5	18
Circuit Diagram 8 amplifier board M12565 ISS 6	19
Circuit Diagram 9 amplifier board M12565 ISS 7	20
Circuit Diagram 10 amplifier board M12565 ISS 7	21

CIRCUIT DESCRIPTION

The Quad 405 is a two channel power amplifier primarily intended for use in high quality sound reproducing systems. The amplifier is usually used with Quad control units though other signal sources can readily be accommodated.

The amplifier uses a current dumping output circuit, a Quad invention which eliminates many of the problems associated with transistor amplifiers, and covered by patents in several countries.

In a current dumping amplifier there is in effect both a low powered very high quality amplifier and a high powered heavy duty amplifier. The low power amplifier controls the loudspeakers at all times, calling upon the high power section to provide most of the muscle. The small amplifier is so arranged – it carries an error signal – that provided the larger power transistors (the dumpers) get within the target area of the required output current it will fill in the remainder accurately and completely. The reproduced quality is *solely* dependent on the small amplifier which because of its low power can be made very good indeed.

Problems of crossover, crossover distortion, quiescent current adjustment, thermal tracking, transistor matching, all disappear. There are no internal adjustments or alignments and the choice of power transistor types is less restrictive.

Fig. 1

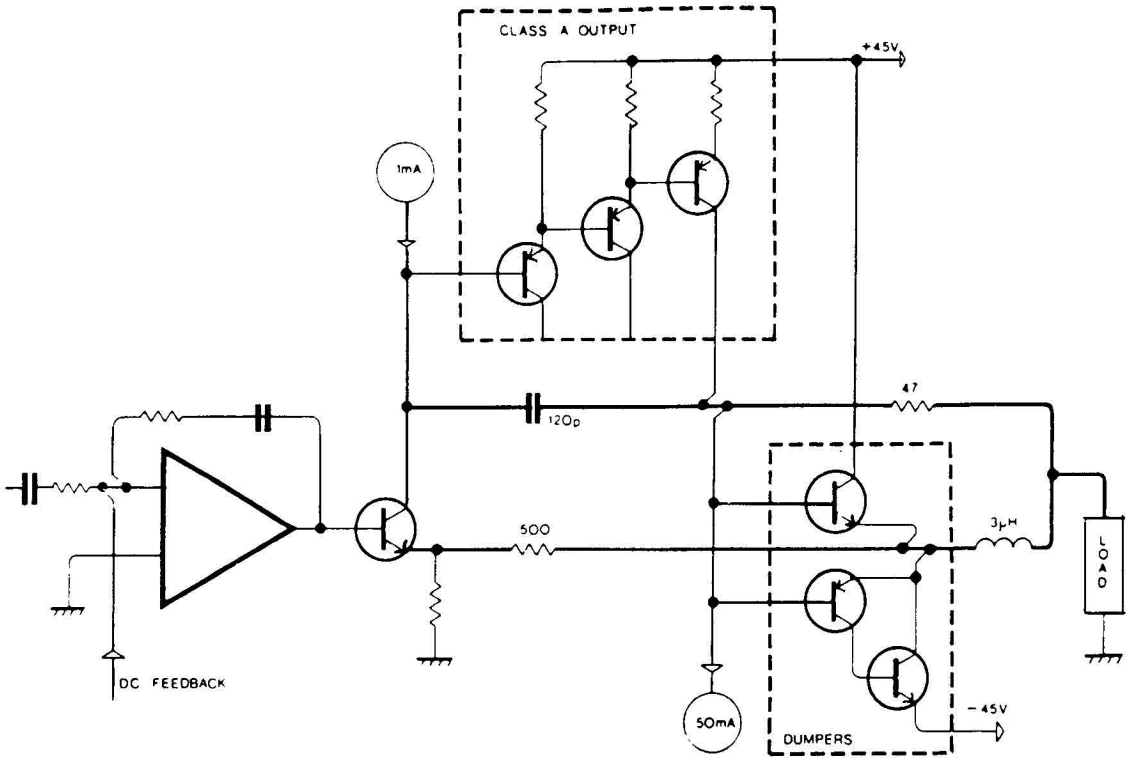

Simplified Schematic of 405 Amplifier showing Class A, Dumpers and Bridge Components.

TEST EQUIPMENT

Sound Technology Distortion Analyser 1700A (ST1700A)
Dual Beam Oscilloscope
4Ω and 8Ω loads of 100W Dissipation
1Ω load of 25W dissipation
2.5 KHz Square Wave Generator
Input Sensitivity Indicator (0 to 1V Rms)
Avometer (or similar multitester)
0 to 12V d.c. power supply
Variac AC power supply

Fig. 2 illustrates a simple switching circuit which may assist if much testing is anticipated.

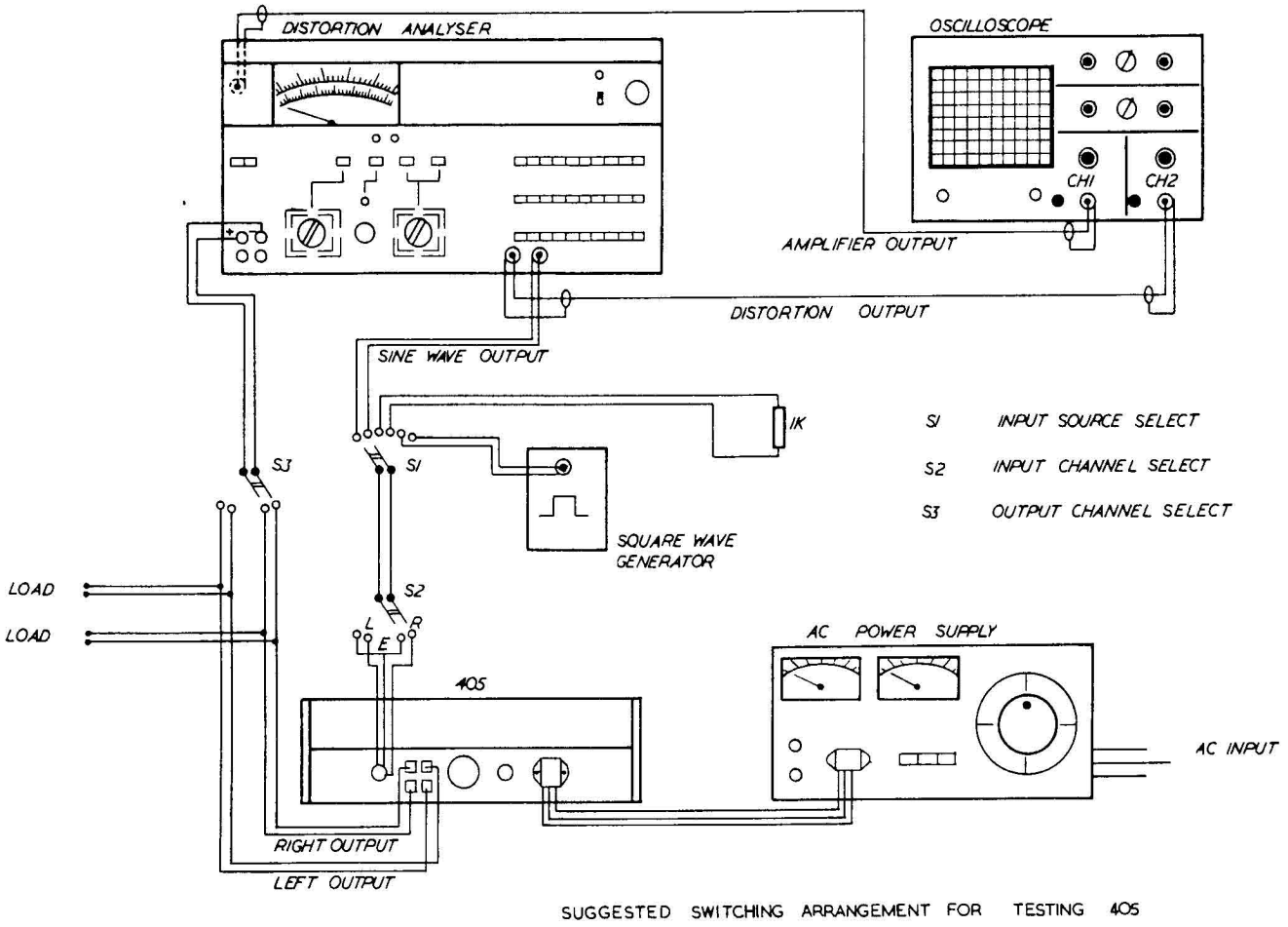

SUGGESTED SWITCHING ARRANGEMENT FOR TESTING 405

Fig. 2

Before testing, the cover of the 405 should be removed.

DISCONNECTING CLAMP CIRCUITS

When servicing a 405 fitted with a clamp circuit, it may be necessary to bypass this circuit.
For 405's fitted with amplifier boards M12368, this may be done by removing the push-on connectors carrying the brown wires from the amplifier boards, and connecting the loads between the black output terminals and the output terminals on the amplifier boards.
For 405's fitted with amplifier boards type M12565, it will be necessary to remove the side panels to gain access to the printed copper side of the amplifier boards. The three screws securing each side panel should be removed, the panel may then be slid outwards from the amplifier. If the solder is removed from the link pad shown in Fig. 18 (A), the clamp circuit will be disconnected.
Care should be taken to ensure that when testing is completed, the link pad is re-soldered.

AMPLIFIER CIRCUIT TESTING M12368 – M12565

The following test procedure is with reference to a 240V amplifier with no voltage limitters.

Select:

Controls **Y1 – 0.5V/cm DC coupled**
Y2 – 0.1V/cm DC coupled
Timebase 0.2 ms/cm

ST. 1700A – **Volts/power 100W RMS**
Distortion Ratio 0.01%
80KHz and 400Hz filters both in
Frequency 1KHz
Low Distortion
Osc. level minimum

Connections **Load 8Ω**
S1 Sine Wave (ST1700A)
S2 Left Input
S3 Left Output

If the Amplifier fails any of the following tests, refer to the appropriate part of the fault finding section, page 6.

1. Check inside the amplifier for obvious faults such as burnt components, blown internal fuses etc. Each of the following checks should be repeated on the other channel.
2. Apply the **AC Supply Volts** whilst observing the current consumption which should not exceed 0.12A.
3. Increase the **oscillator level** to 0.5V Rms ± 0.5dB. The output should be 100W with no sign of clipping.
4. Select **set level** and adjust meter deflection for zero. Select **distortion** which should be less than 0.01%. Select **volts/power**, decrease the **applied frequency** to 100Hz, remove **400Hz** filter and adjust **oscilloscope timebase** to 2 ms/cm. **Set level**, select **distortion** which should be less than 0.01%. Select **volts/power**, increase the **applied frequency** to 3KHz, select **400Hz** filter and adjust **timebase** to 50μs/cm. Select **distortion** which should again be less than 0.01%.
5. Select **volts/power**, increase **applied frequency** to 10KHz and adjust **timebase** to 20μs/cm. Adjust **oscillator level** so that output is 100W. **Set level** then select **distortion** which should be less than 0.05%.
6. Select **volts/power**, increase **applied frequency** to 20KHz and adjust **timebase** to 10μs/cm. Reduce **output level** to 80W. **Set level** and measure **distortion** which should be less than 0.1%.
7. Select **volts/power** and decrease **frequency** to 1KHz. Adjust **oscillator level** so that output is 100W and adjust **timebase** to 0.2ms/cm. The following checks are to monitor the low frequency roll off of the 405. Select **30Hz** and the output level should fall by approximately 0.3dB. Select **20Hz** and the output level should fall by approximately 1dB. Select **10Hz** and the output level should fall by 7dB ± 1.5dB.
8. Increase **frequency** to 1KHz. For 405's with amplifier boards type M12368 insert 1K8 voltage limitting resistors into the mini sockets on each amplifier board. For 405's with amplifier boards type M12565-3 insert a link into these sockets. The output waveform should indicate clipping. Reduce the **oscillator level** until the clipping just disappears at which point the output level should be 20V Rms ± 1V. Remove voltage limitters, and adjust **oscillator level** for 100W output.
9. Select **volts/power** and **square wave** input, (S1). Adjust **timebase** to 0.1ms/cm. Remove **load** and note the difference in the waveform with load and no load. There should be a slight difference in gain (10mV) but no overshoot. Re-connect 8Ω load.
10. The following checks should be carried out with no input signal and the input to the amplifier board loaded by a 1K resistor, (S1). Remove **400Hz filter** and select **noise** which should be better than –93dB unweighted.
11. Select **volts/power 400Hz filter** and **sine wave** input at a **frequency** of 1 KHz and adjust **oscillator level** for 100W output. Select **1Ω load.** The output should clip equally on both halves of the waveform as shown in Fig. 11.
12. Select **4Ω load**, output level should be 70W just prior to clipping.
13. **CLAMP CIRCUIT TESTING**
    In order to test the clamp circuit, the circuit should first be disconnected from its amplifier board, as described on page 4.
    For 405's fitted with amplifier boards M12368 apply **6V d.c.** across the output terminals of the relevant channel with an ammeter in circuit.
    For 405's fitted with amplifier boards M12565 a wire should be soldered to the back of the amplifier board as shown in Fig. 18(B). 6V d.c. should be applied between this wire and the black output terminal of the relevant channel, with an ammeter in circuit.
    In both cases the current should not exceed 0.5mA. Reverse the polarity of the supply and repeat the test. The test may then be carried out on the other channel.
    The complete test should then be repeated using a 12V d.c. supply with a 10Ω resistor in series, when the current should be approximately 1A.

FAULT FINDING

The following information may assist in locating faults occurring on the amplifier boards of a 405.
In each case only the faulty channel of the 405 is driven, as in the test procedure. The input should be a sine wave of 0.5V Rms and the output should be applied to an 8Ω load unless otherwise stated. The numbers refer to the relevant test check.
*Board type M12368 only **Board type M12565 only.

Effect	Cause
1.	
R33 Burnt	Collector-base TR10 O/C
R37 Burnt*	L1 O/C
R41 Burnt*	L3 O/C
R39 Burnt	R20 O/C, R21 O/C
R38 Burnt	D5 or D6 O/C
2.	
High Current	TR2 O/C, TR3 O/C, TR7 O/C, TR9 S/C
	TR10 S/C, R7 O/C C8 S/C
*	C3 S/C
**	D2 O/C R8 O/C
Draws high current which drops to 0.1A after approx 2 seconds	R14 O/C
3.	
No increase in AC supply current for increase in signal	R3 O/C, C1 O/C, R31 O/C
Signal is unstable and clips	R6 O/C
100W o/p for 0.3V input	R20 O/C, R21 O/C
Waveform trace as in Fig. 3	TR8 O/C, TR6 S/C, R36 O/C, R30 O/C, C10 S/C
Waveform trace as in Fig. 4	L2 O/C
Approximately 4W output	R16 O/C
4.	
Second Harmonic Distortion	IC1, TR1, TR2, TR3, TR4, R5, R6, R17, R18, R22, C1.
Second Harmonic Distortion especially at 100Hz and on O/C load.	C2, C7, C8
Third Harmonic Distortion especially at 100Hz	R5.
Third Harmonic Distortion	L2, R3, R6, R16, R20, R21, C3.
Hum and noise	C5 O/C
Hum*	R37 O/C
Waveform trace as in Fig. 5*	TR3 S/C
Waveform trace as in Fig. 6*	R23 O/C, R5 O/C
Waveform trace as in Fig. 7	R33 S/C
Waveform trace as in Fig. 8*	R8 O/C
Waveform trace as in Fig. 9	C5 S/C, R15 O/C, TR1 O/C
6.	
Distortion at 20KHz	D5 S/C, D6 S/C
8.	
Limitting resistor R11 has no effect	R10 S/C
9.	
Square Wave Trace as in Fig. 10	C6 O/C
10.	
Noise especially at 100Hz	R5
Noise with large Spikes	TR1
Noise	IC1, R12, R3, R4, TR2
11.	
Current limitting check with 1Ω load.	
Waveform trace as in Fig. 12	R29 O/C, R28 S/C, R25 O/C
Waveform trace as in Fig. 13	D3 S/C, R27 O/C, R24 O/C, R26 S/C
Waveform trace as in Fig. 14	TR6 O/C
Waveform trace as in Fig. 8	C11 S/C, TR5 O/C
13.	
Draws high current with 6V D.C. supply	T2 S/C

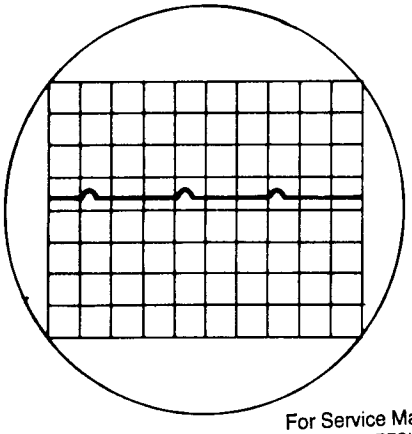

Fig. 3

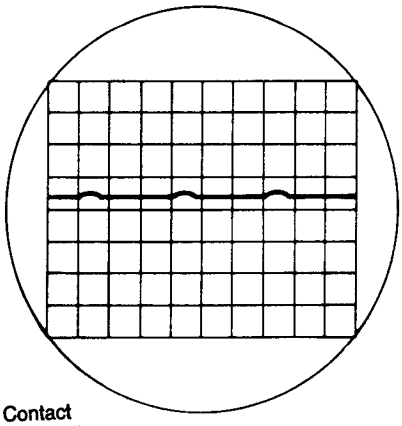

Fig. 4

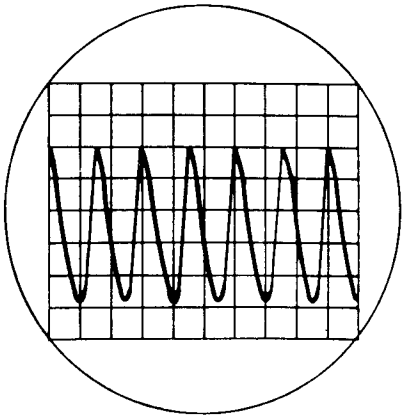

Fig. 5

For Service Manuals Contact
MAURITRON TECHNICAL SERVICES
8 Cherry Tree Rd, Chinnor
Oxon OX9 4QY
Tel:- 01844-351694 Fax:- 01844-352554
Email:- enquiries@mauritron.co.uk

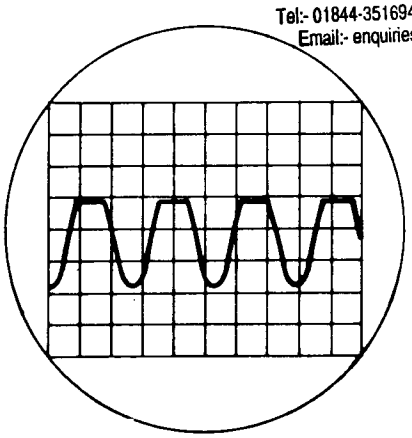

Fig. 6

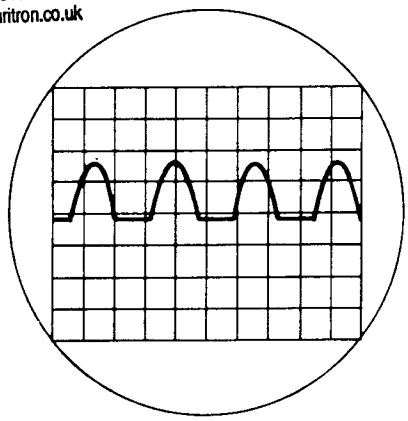

Fig. 7

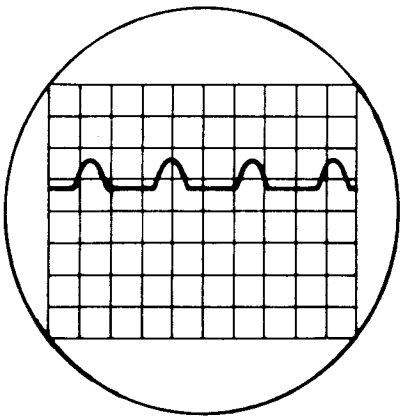

Fig. 8

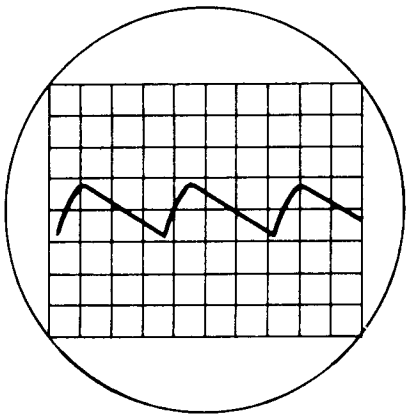

Fig. 9

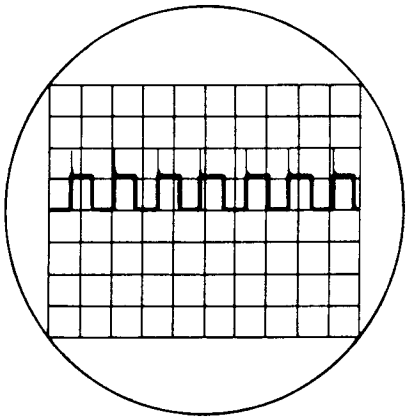

Fig. 10

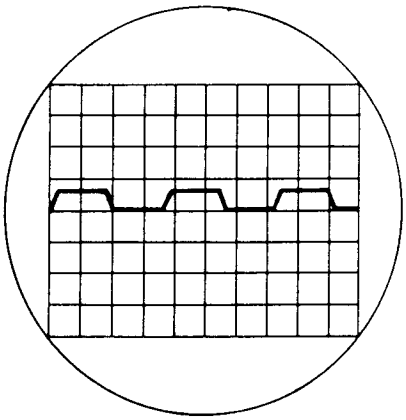

Fig. 11

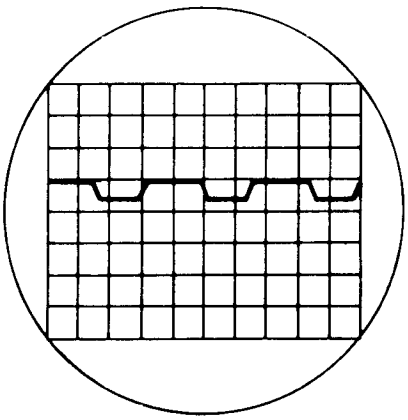

Fig. 12

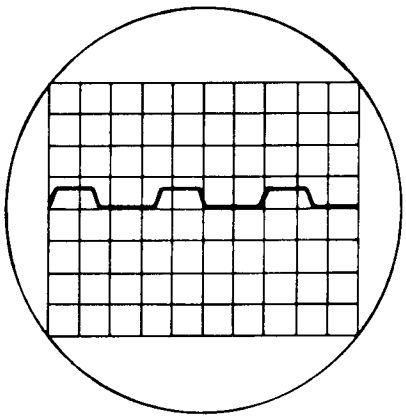

Fig. 13

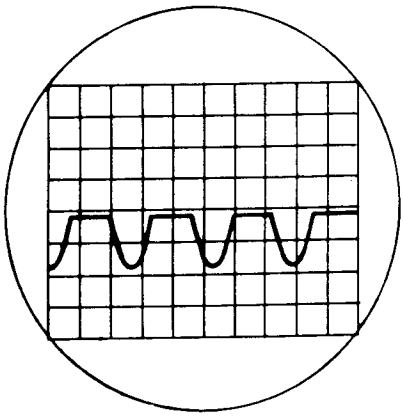

Fig. 14

MODIFICATIONS TO PRINTED CIRCUIT BOARDS.

Amplifier Board M12368.5 originally fitted. Circuit diagram issue 2.

1. **Amplifier Board M12368.6**
   Copper track layout modified component layout unchanged.
2. **Amplifier Board M12368.7** Circuit diagram issue 3.
   R4 changed from 10K to 22K
   R5 changed from 10K to 4K7
   R9 changed from 180Ω to 220Ω
   R19 3K3 removed
   R23 changed from 3K3 to 1K2
   C9 330p removed
   C18 47nF added as on circuit diagram
   FS1 and FS2 effectively changed places
   R2 changed from 2.2Ω to 10Ω
   Copper track width reduced.

3.(a) **Amplifier Board M12368.9** introduced at Serial Number 9000. Circuit diagram issue 4.
   R41 22Ω added
   L3 6.9μH added
   C15 0.1μH added
   C16 0.1μH added
   C18 47nF removed
   C19 1nF added
   Copper track width reduced.
   Also at Serial Number 9000 a clamp circuit, on PCB M12400, was mounted on the output terminals (fig. 15). This detects excessive DC off-set at the output and short-circuits, blowing the internal 4 amp fuses FS1/FS2, to protect the loudspeaker.

3.(b) At Serial Number 29,000 the following changes occurred. Circuit diagram issue 5
   R10 changed from 1K to 1K8
   R27 changed from 8K2 to 15K
   R29 changed from 8K2 to 15K
   R35 changed from 0.08Ω to 0.091Ω
   R36 changed from 0.08Ω to 0.091Ω
   D1 changed from LR120C to LR150C
   D2 changed from LR120C to LR150C

4. **Amplifier Board M12368.10**
   Identical to M12368.9 except for copper pads for power transistors modified for production purposes.
5. **Amplifier Board M12565.3** introduced at Serial Number 59,001. Circuit diagram issue 6. Other 405's with this board are Serial Numbers 57,301 to 57,600 inc.
   This board incorporates the clamp circuit and voltage limiter is now a link.
6. **Amplifier Board M12565.5**, circuit diagram issue 7, was also fitted from serial number 62500 onwards but with 405 nameplates. See 405.2, page 12.

Alternatives

Transistors – on M12368 issues 5, 6 and 7 BDY77 or BDY74 may have been used for TR9 and TR10. BDY77 is a suitable replacement for both, but faster transistors may cause instability.

On M12368 issues 9 and 10 and M12565.3 the following transistors may have been used, 2SD424, 17556, 2SD676 and are interchangeable.

TR2 – BC682, ZTX304, BCX32, BC546B interchangeable

TR3, TR4 – E5458, ZTX504, BC556B interchangeable

TR7, TR8 – 40872 or 2SA740 interchangeable

L.E.D.

LP1 Hewlett Packard 5082-4850, Exciton XC5053, Toshiba TLR114A interchangeable.

CLAMP CIRCUIT

Introduced co-incident with amplifier board M12368.9 at serial number 9001. All 405's with serial numbers 9000 and under being returned for service, should be fitted with a clamp board as shown below.
At serial number 59,001 the clamp circuit was fitted as an integral part of the amplifier board M12565.3.
The function of this circuit is to monitor the D.C. component of the output. In the event of a component failure which causes excessive D.C. volts, the circuit will short circuit the amplifier output and thus protect the speakers.

REPLACING A CLAMP BOARD

If it is necessary to replace a clamp board the following instructions should be followed:

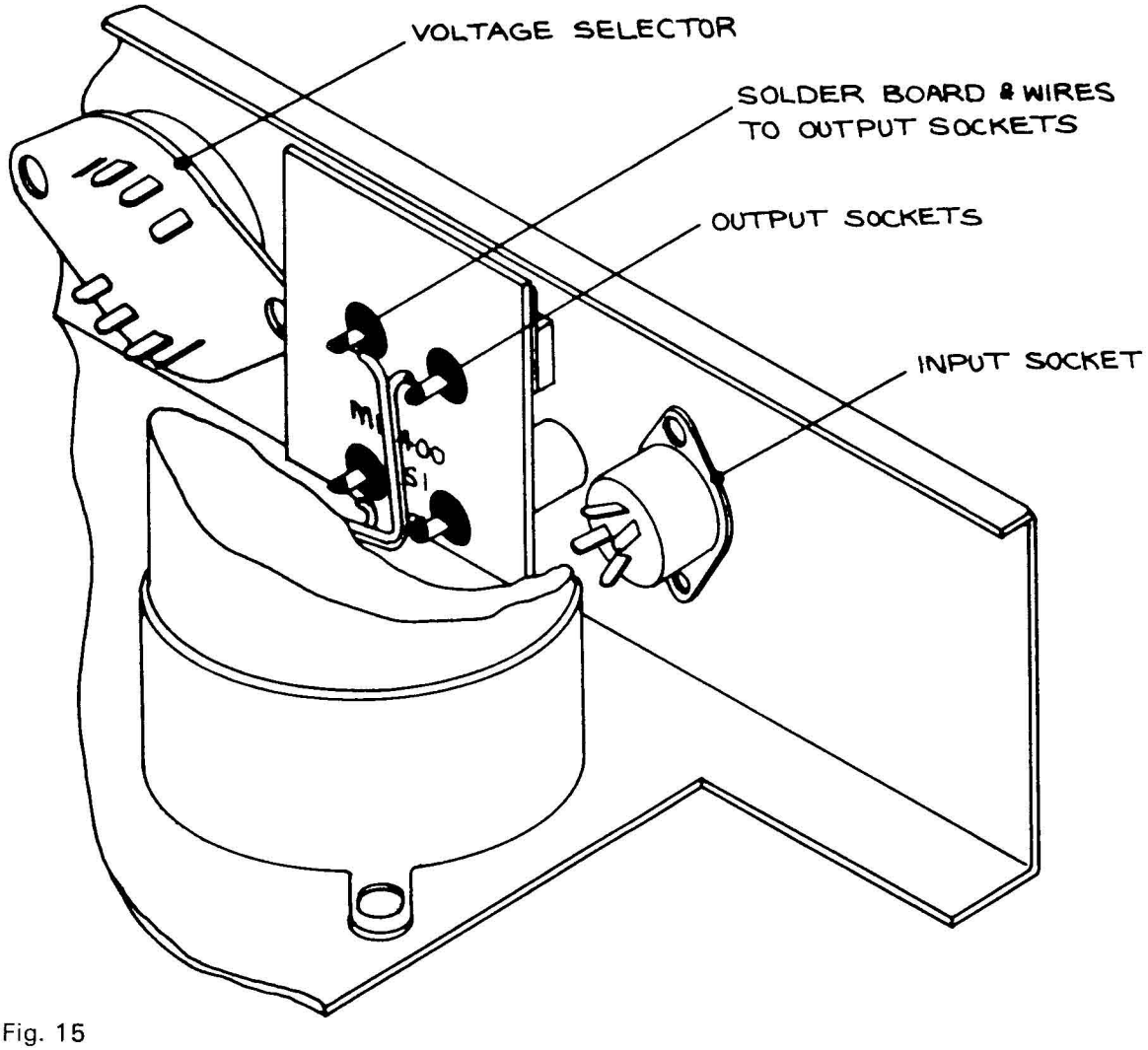

Fig. 15

1. Disconnect the wiring to the right channel circuit board and fold it back onto the transformer. Loosen the clamp holding the electrolytic capacitor next to the output terminals, and lift the capacitor out of the way.
2. Disconnect the leads to the output sockets, place the clamp board over the output connectors and re-solder. It is advisable to tin the output connector tags before positioning the clamp board. This makes soldering easier.
3. Replace the capacitor and re-connect the tags to the righthand amplifier board.

CLAMP CIRCUIT ALTERNATIVES

T1 2N4992 or BS08A 03
T2 SC141B or TIC226B or RCA T2800.

CONVERSION OF 405 TO A MONO 180 WATT AMPLIFIER

To carry out the conversion, the modification kit Q410M0D should first be obtained.

1. Remove 405 cover and baseplate.
2. Unplug the Amp connectors from the righthand channel printed circuit board (righthand side when viewed from the front).
3. Release the clip securing the rear 10,000μF capacitor (C14) and lay the capacitor over the righthand channel board.
4. Unsolder the four leads from the output terminals.
   For 405's fitted with amplifier boards M12368 (i.e. serial numbers 59000 and below) remove the clamp board.
   To disconnect the clamp circuit on 405's fitted with amplifier boards M12565 (i.e. serial numbers above 59000) remove both of the side panels. The solder should then be removed from the link pads shown as A in fig 18. The side panels should then be refitted.
5. Remove the output terminals and replace those for the righthand channel with the sockets provided, Red at the top. Fit the blanking grommets provided in the vacant holes.
6. Fit the new printed circuit clamp board to the output sockets and reconnect the output leads. Brown/Red to the pin marked R, Brown/White to the pin marked L and both Green leads to the pin next to L.
7. Remove the 4 pin Din input socket and unsolder the leads from it.
8. Connect these leads to the new input board, White to L and Red to R and screens to the two E tags.
9. Fit the new input socket and board.
10. Refit the 10,000μF capacitor and Amp connectors to the righthand board.
11. Remove the output leads, Brown/White from lefthand and Brown/Red from righthand printed boards.
12. Connect a 4-8Ω speaker between the output tags of these two boards.
13. Switch on the amplifier, inject a signal of approximately 100mV at 1kHz at the input socket (left and right pins are now common). Remove the blanking grommet adjacent to the input socket and adjust the pre-set potentiometer through this hole for a null in the signal from the speaker, increasing the input signal level as required for final accurate setting.
14. Switch off, remove signal input, disconnect the loudspeaker, reconnect output leads, refit blanking grommet, base and cover.

REMOVING THE AMPLIFIER MODULES

1. Note the colour coding for reconnection and remove the push-on tab connectors A.
2. Undo the four fixing screws B, for each module.
3. Remove the heatsink grease from the face of the aluminium T-section and retain for use when re-fitting.

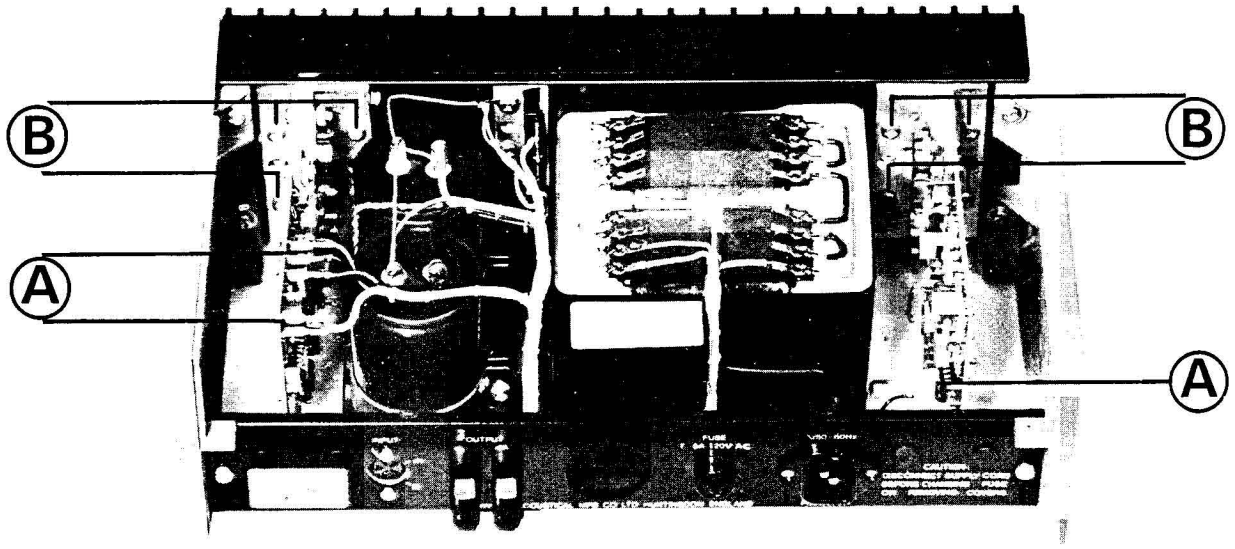

Fig. 16

REPLACING THE QUAD 405 TRANSFORMER

1. Disconnect the A.C. supply and remove top cover (2 screws) and bottom plate (4 screws).
2. Note carefully the connections and then unsolder the external wiring to the A.C. supply transformer.
3. Remove the two retaining screws through the large centre holes of the 6 in each amplifier board mounting, and then release the boards by undoing the other 4 in each. These 12 screws fasten into tapped strips located in slots in the rear of the finned heat sink sections, which now become free of the front plate.
4. Release the transformer by undoing 4 screws through the front plate and 2 through the bottom.
5. Reverse the procedure with the new transformer.

Note: It should not be necessary to remove the push-on connections from the boards but if they are removed they should be handled carefully and replaced correctly.

QUAD 405-2

The original 405 provided 100 watts per channel into load impedances between 4.5 and 8 ohms. To meet the need of 4 ohm loudspeakers and 8 ohm speakers whose impedance falls below 4.5 ohms, the 405-2 was introduced in January 1983 at serial number 65000, but the 405-2 modules had already been fitted from 62500 onwards. Many earlier amplifiers have also since been converted to 405-2 by owners and dealers, by replacing the modules.

The 405-2 has a more sophisticated current limiter circuit based on a thick film assembly N1/N2, permitting full output into loads between 3 and 10 ohms, and up to 50 watts into 1.5 ohms, provided the output transistors will not be hazarded by doing so. (See Fig. 17). As with earlier 405 models after serial number 59001, the output clamp circuit is incorporated in the main module boards and a shorting link used for the voltage limiter.

The first 405-2 circuit diagram was 12333 issue 7 and the printed board reference M12565.5.

Subsequent modifications were:

Date	Serial No.	PCB 12565 issue	Circuit Diagram 12333 issue	Changes
May 83	66700	6	8	C20 (4n7) added to avoid mild instability when switching off. D13 added in series with D5 to correct response at 20kHz. R44 added to maintain unconditional stability.
July 83	67950	6	8	Output terminals replaced by 4mm sockets.
Aug 84	72501	7	9	TR4 changed to BC556B and R18 omitted replacing both TR3 and TR4.
Dec 85	83000	7	–	Voltage selector omitted.
Feb 86	85000	7	10	New mains input connector incorporating fuse-holder. Din input replaced by phono sockets. Signal earth isolated from chassis by R2 to avoid hum loop when using mains earth.

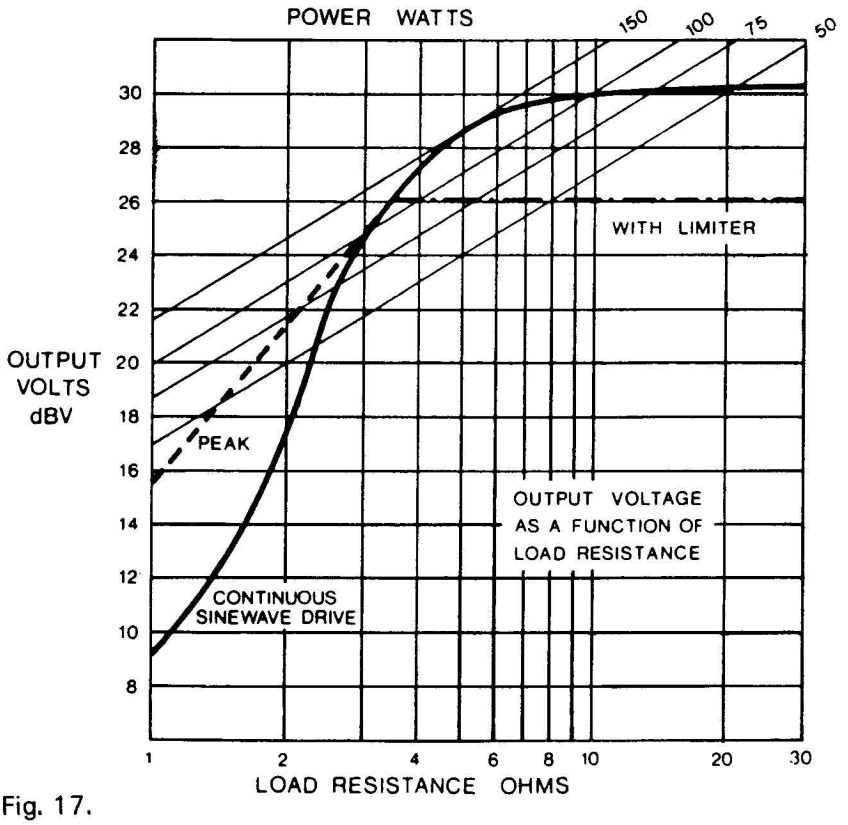

Fig. 17.

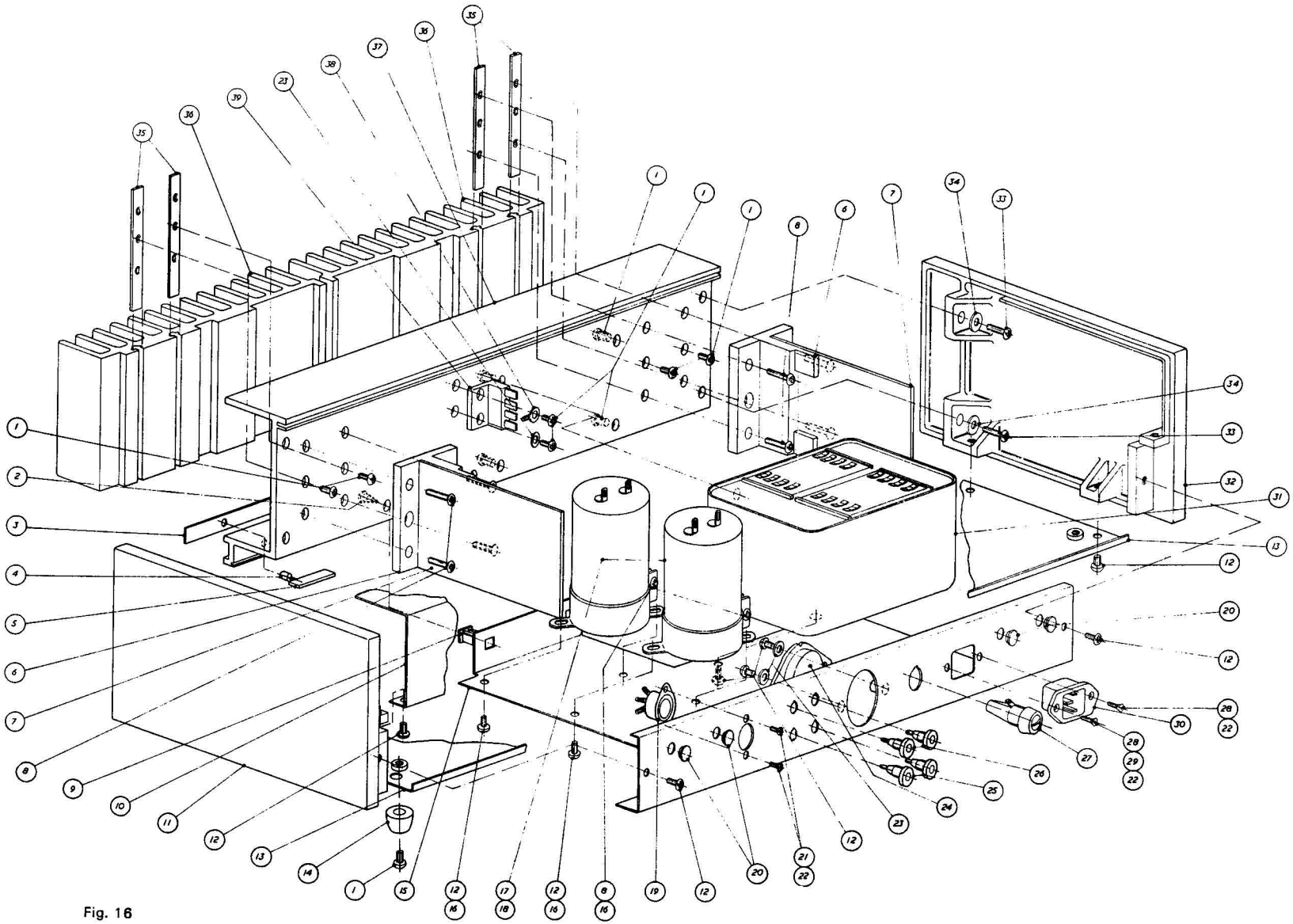

Fig. 16

No.	DRAWING No	DESCRIPTION	STOCK No
1		SCREW M4 x 8mm POSIDRIV	
2		SCREW No 6 x 3/8 POSIDRIV	
3	A3/12366	NAMEPLATE	
4		L.E.D HEWLETT PACKARD	
5	A4/12377	PRINTED WIRING BOARD	
6	A3/12348	AMPLIFIER MOUNTING BRACKET 6	
7	M 12369	PRINTED WIRING BOARD 4	
8		SCREW M4 x 14mm POSIDRIV	
9		LOKNUT NUT ITW 212-180402-07	
10	A8/12357	COVER	
11	A1/12353	RIGHTHAND END COVER	
12		SCREW M4 x 6mm POSIDRIV	
13	A8/12358	BASE PLATE	
14		FOOT CDW 88/588	
15	A1/12355	CHASSIS	
16		NUT M4 FULL HEX	
17		CAPACITOR 10000μ 63V ERIE	
18		CAPACITOR CLIP ERIE V4	
19		INPUT SOCKET	671/F
20		SOLID GROMMET HV3788 PA Rm	
21		SCREW M3 x 6mm POSIDRIV	
22		NUT M3 FULL HEX	
23		WASHER M4	
24		VOLTAGE SELECTOR 7/1-007	
25		OUTPUT SOCKET B&L LHS BLACK	671/0
26		OUTPUT SOCKET B&L LHS RED	671/0
27		FUSEHOLDER BULGIN F296/S	
28		SCREW M3 x 6mm INS/HD POSIDRIV	
29		SOLDER TAG M3 TUCKER T996	
30		MAINS PLUG OTTO HBL 4062-2	
31	A3/12362	MAINS TRANSFORMER	
32	A1/12352	LEFTHAND END COVER	
33		SCREW M4 x 12mm POSIDRIV	
34		WASHER M4 12mm O/D	
35	A4/12356	HEATSINK FIXING STRIP	
36	A3/12351	HEATSINK	
37	A8/12354	FRONT PANEL	
38		SOLDER TAG M4 TUCKER 5888	
39		RECTIFIER ABI PM7A2G	
8		SUB-ASSEMBLY TO DRG A3/12376	

Assembly Diagram.

BOARD NUMBER M12368 ISS 5 AND 6

Voltages shown are with no signal input, limiter resistors omitted and no speaker connected.

Unmarked = negative with respect to + rail.

Prefix E = relative to earth.

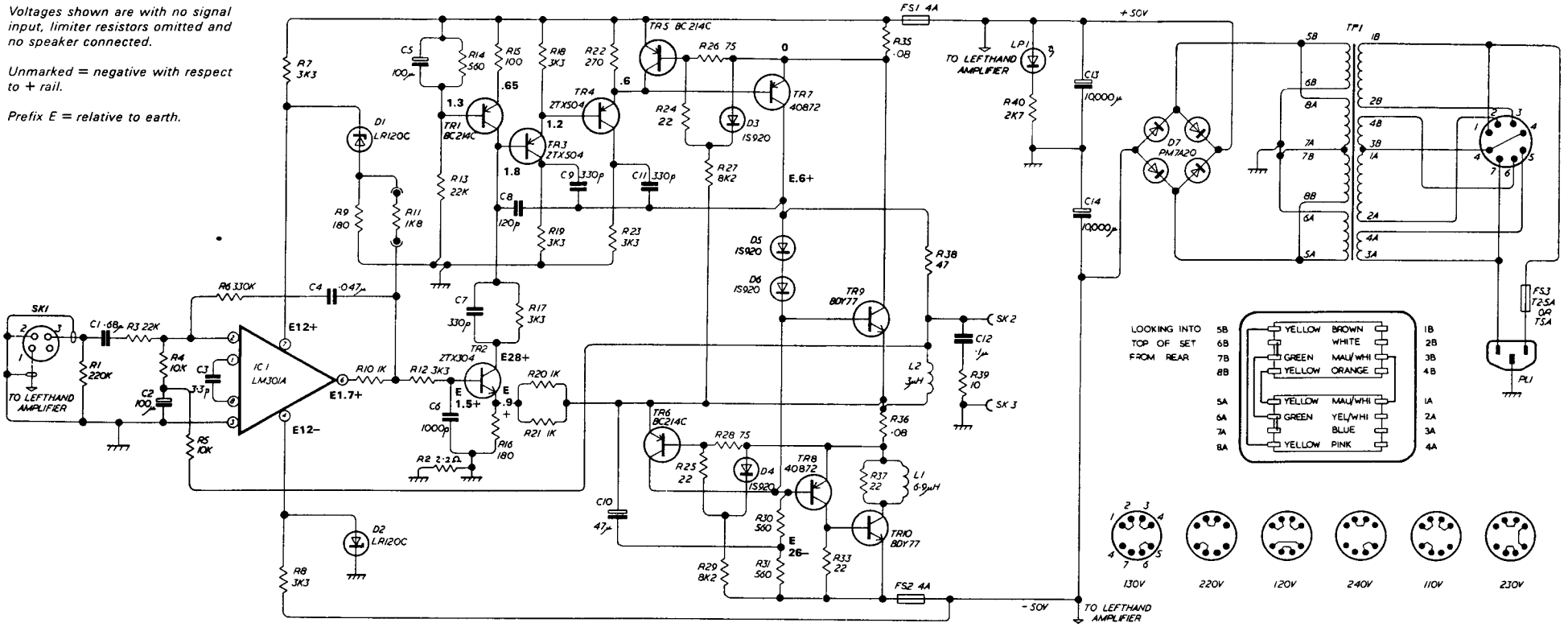

No.	Value	Tol	Reference	Stock No.
R1	220K	± 10%	Resistor	R220KJ1
R2	2.2	± 5%	Resistor	R2R20DS
R3	22K	± 5%	Resistor	R22K0J1
R4	10K	± 10%	Resistor	R10K0J1
R5	10K	± 10%	Resistor	R10K0J1
R6	330K	± 5%	Resistor	R330KJ1
R7	3K3	± 10%	Resistor	R3K30J1
R8	3K3	± 10%	Resistor	R3K30J1
R9	180	± 5%	Resistor	R180RJ1
R10	1K	± 5%	Resistor	R1K00J1
R11	1K8	± 10%	Resistor	R1K80J1
R12	3K3	± 10%	Resistor	R3K30J1
R13	22K	± 5%	Resistor	R22K0J1
R14	560	± 10%	Resistor	R560RJ1
R15	100	± 10%	Resistor	R100RJ1
R16	180	± 5%	Resistor	R180RJ1
R17	3K3	± 10%	Resistor	R3K30J1
R18	3K3	± 10%	Resistor	R3K30J1
R19	3K3	± 10%	Resistor	R3K30J1
R20	1K	± 5%	Resistor	R1K00J1
R21	1K	± 5%	Resistor	R1K00J1
R22	270	± 10%	Resistor	R270RJ1
R23	3K3	± 10%	Resistor	R3K30J1
R24	22	± 10%	Resistor	R22R0J1
R25	22	± 10%	Resistor	R22R0J1
R26	75	± 5%	Resistor	R75R0J1

No.	Value	Tol	Reference	Stock No.
R27	8K2	± 5%	Resistor	R8K2RJ1
R28	75	± 5%	Resistor	R75R0J1
R29	8K2	± 5%	Resistor	R8K20J1
R30	560	± 10%	Resistor 2.5W	R560RJS
R31	560	± 10%	Resistor 2.5W	R560RJS
R33	22	± 10%	Resistor	R22R0J1
R35	0.08		Resistor Acoustical DRG A4/12383	RR091JY
R36	0.08		Resistor Acoustical DRG A4/12383	RR091JY
R37	22	± 10%	Resistor	R22R0J1
R38	47	± 5%	Resistor	R47R0J1
R39	10	± 10%	Resistor	R10R0J1
R40	2K7		Resistor 1.6W	R2K70JR
C1	0.68µ		Capacitor 100V	C680NKS
C2	100µ	± 10%	Capacitor 3V	C100UME
C3	3.3P	± 20%	Capacitor	C3P30KJ
C4	0.047µ		Capacitor 250V	C47N0JS
C5	100µ		Capacitor 6V	C100UZB
C6	1000P		Capacitor 400V	C1N00KK
C7	330P	± 20%	Capacitor	C330PKJ
C8	120P	± 5%	Capacitor	C120PJI
C9	330P	± 20%	Capacitor	C330PKJ
C10	47µ		Capacitor 40V	C47U0ZB
C11	330P		Capacitor	C330PKJ

No.	Value	Tol	Reference	Stock No.
C12	0.1µ		Capacitor 250V	C100NKC
C13	10,000µ		Capacitor 63V	C10KUTA
C14	10,000µ		Capacitor 63V	C10KUTA
TR1			Transistor BC214C	DBC214C
TR2			Transistor BC682 or ZTX304 or BCX32	DZTX304
TR3			Transistor E5458 or ZTX504	DZTX504
TR4			Transistor E5458 or ZTX504	DZTX504
TR5			Transistor BC214C	DBC214C
TR6			Transistor BC214C	DBC214C
TR7			Transistor 40872 or 2SA740	D40872X
TR8			Transistor 40872 or 2SA740	D40872X
TR9			Transistor BDY74 or BDY77	DBDY77Q
TR10			Transistor BDY74 or BDY77	DBDY77Q
D1			Zener Diode LR120C	DZ12VAA
D2			Zener Diode LR120C	DZ12VAA
D3			Diode IS920	DIS920B
D4			Diode IS920	DIS920B
D5			Diode IS920	DIS920B
D6			Diode IS920	DIS920B
D7			Bridge Rectifier	DPM7AZQ
IC1			LM301A	DML301A
L1	6.9µH	± 20%	Inductor ANCO TC1/65	L12406A

No.	Value	Tol	Reference	Stock No.
L2	3µH	± 5%	Inductor ANCO 440/D	L12405A
FS1	4A			UM04AQA
FS2	4A			UM04AQA
FS3	T2.5A		220-240V	UM2A5DA
	T5A		110-130V	UM05ADA
LP1			Hewlett Packard 5082-4850 Red	BL5053R
TF1			Acoustical DRG A3/12362	L12362A

Stock numbers listed for replacement parts, may be equivalents for original parts which are no longer available, therefore manufacturers and tolerances may vary.

BOARD NUMBER M12368 ISS 7

Voltages shown are with no signal input, limiter resistors omitted and no speaker connected.

Unmarked = negative with respect to + rail.

Prefix E = relative to earth.

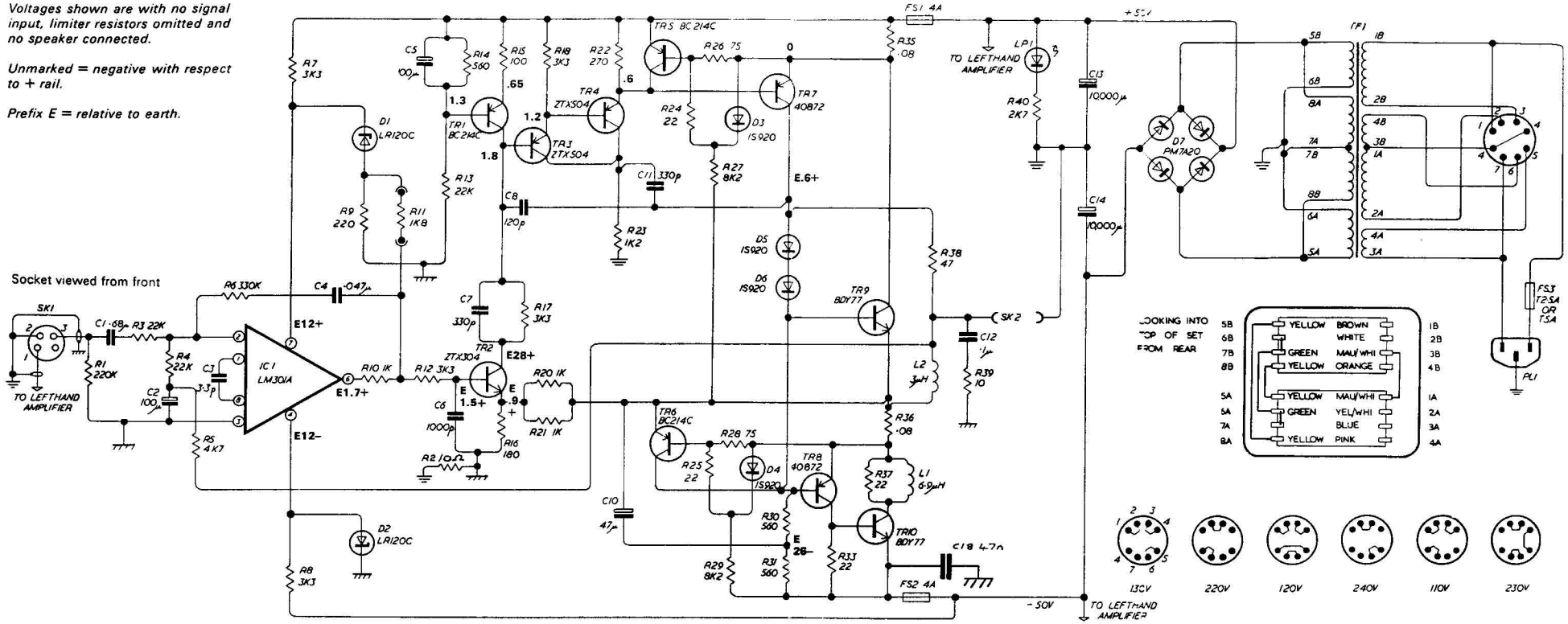

No.	Value	Tol	Reference	Stock No.
R1	220K	± 10%	Resistor	R220KJ1
R2	10	± 5%	Resistor	R10R0J1
R3	22K	± 2%	Resistor	R22K0J1
R4	22K	± 2%	Resistor	R22K0J1
R5	4.7K	± 10%	Resistor	R4K70J1
R6	330K	± 5%	Resistor	R330KJ1
R7	3K3	± 10%	Resistor	R3K30J1
R8	3K3	± 10%	Resistor	R3K30J1
R9	220	± 5%	Resistor	R220RJ1
R10	1K	± 2%	Resistor	R1K00J1
R11	1K8	± 10%	Resistor	R1K80J1
R12	3K3	± 10%	Resistor	R3K30J1
R13	22K	± 2%	Resistor	R22K0J1
R14	560	± 10%	Resistor	R560RJ1
R15	100	± 10%	Resistor	R100RJ1
R16	180	± 2%	Resistor	R180RJ1
R17	3K3	± 10%	Resistor	R3K30J1
R18	3K3	± 10%	Resistor	R3K30J1
R19				
R20	1K	± 2%	Resistor	R1K00J1
R21	1K	± 2%	Resistor	R1K00J1
R22	270	± 10%	Resistor	R270RJ1
R23	1K2	± 10%	Resistor 1.6W	R1K20JR
R24	22	± 10%	Resistor	R22R0J1
R25	22	± 10%	Resistor	R22R0J1
R26	75	± 5%	Resistor	R75R0J1

No.	Value	Tol	Reference	Stock No.
R27	8K2	± 5%	Resistor	R8K20J1
R28	75	± 5%	Resistor	R75R0J1
R29	8K2	± 5%	Resistor	R8K20J1
R30	560	± 10%	Resistor 2.5W	R560RJS
R31	560	± 10%	Resistor 2.5W	R560RJS
R33	22	± 10%	Resistor	R22R0J1
R35	0.08		Resistor Acoustical DRG.A4/12383	RR091JY
R36	0.08		Resistor Acoustical DRG.A4/12383	RR091JY
R37	22	± 10%	Resistor	R22R0J1
R38	47	± 5%	Resistor	R47R0J1
R39	10	± 10%	Resistor	R10R0J1
R40	2K7		Resistor 1.6W	R2K70JR
C1	0.68µ		Capacitor 100V	C680NKS
C2	100µ	± 10%	Capacitor 3V	C100UME
C3	3.3P	± 20%	Capacitor	C3P30KJ
C4	0.047µ		Capacitor 250V	C47N0JS
C5	100µ		Capacitor 6V	C100UZB
C6	1000P		Capacitor 400V	C1N00KK
C7	330P	± 20%	Capacitor	C330PKJ
C8	120P	± 5%	Capacitor	C120PJI
C9				
C10	47µ		Capacitor 40V	C47U0ZB
C11	330P		Capacitor	C330PKJ

No.	Value	Tol	Reference	Stock No.
C12	0.1µ		Capacitor 250V	C100NKC
C13	10,000µ		Capacitor 63V	C10KUTA
C14	10,000µ		Capacitor 63V	C10KUTA
C18	0.047µ		Capacitor	C47N0JI
TR1			Transistor BC214C	DBC214C
TR2			Transistor BC682 or ZTX304 or BCX32	DZTX304
TR3			Transistor E5458 or ZTX504	DZTX504
TR4			Transistor E5458 or ZTX504	DZTX504
TR5			Transistor BC214C	DBC214C
TR6			Transistor BC214C	DBC214C
TR7			Transistor 40872 or 2SA740	D40872X
TR8			Transistor 40872 or 2SA740	D40872X
TR9			Transistor BDY74 or BDY77	DBDY77Q
TR10			Transistor BDY74 or BDY77	DBDY77Q
D1			Zener Diode LR120C	DZ12VAA
D2			Zener Diode LR120C	DZ12VAA
D3			Diode IS920	DIS920B
D4			Diode IS920	DIS920B
D5			Diode IS920	DIS920B
D6			Diode IS920	DIS920B
D7			Bridge Rectifier	DPM7A2Q
IC1			LM301A	DML301A

No.	Value	Tol	Reference	Stock No.
L1	6.9µH	± 20%	Inductor ANCO TC1/65	L12406A
L2	3µH	± 5%	Inductor ANCO 440/D	L12405A
FS1	4A			UM04AQA
FS2	4A			UM04AQA
FS3	T2.5A		220-240V	UM2A5DA
	T5A		110-130V	UM05ADA
LP1			Hewlett Packard 5082-4850 Red	BL5053R
TF1			Acoustical DRG A3/12362	L12362A

Stock numbers listed for replacement parts, may be equivalents for original parts which are no longer available, therefore manufacturers and tolerances may vary.

BOARD NUMBER M12368 ISS 9

Voltages shown are with no signal input, limiter resistors omitted and no speaker connected.

Unmarked = negative with respect to + rail.

Prefix E = relative to earth.

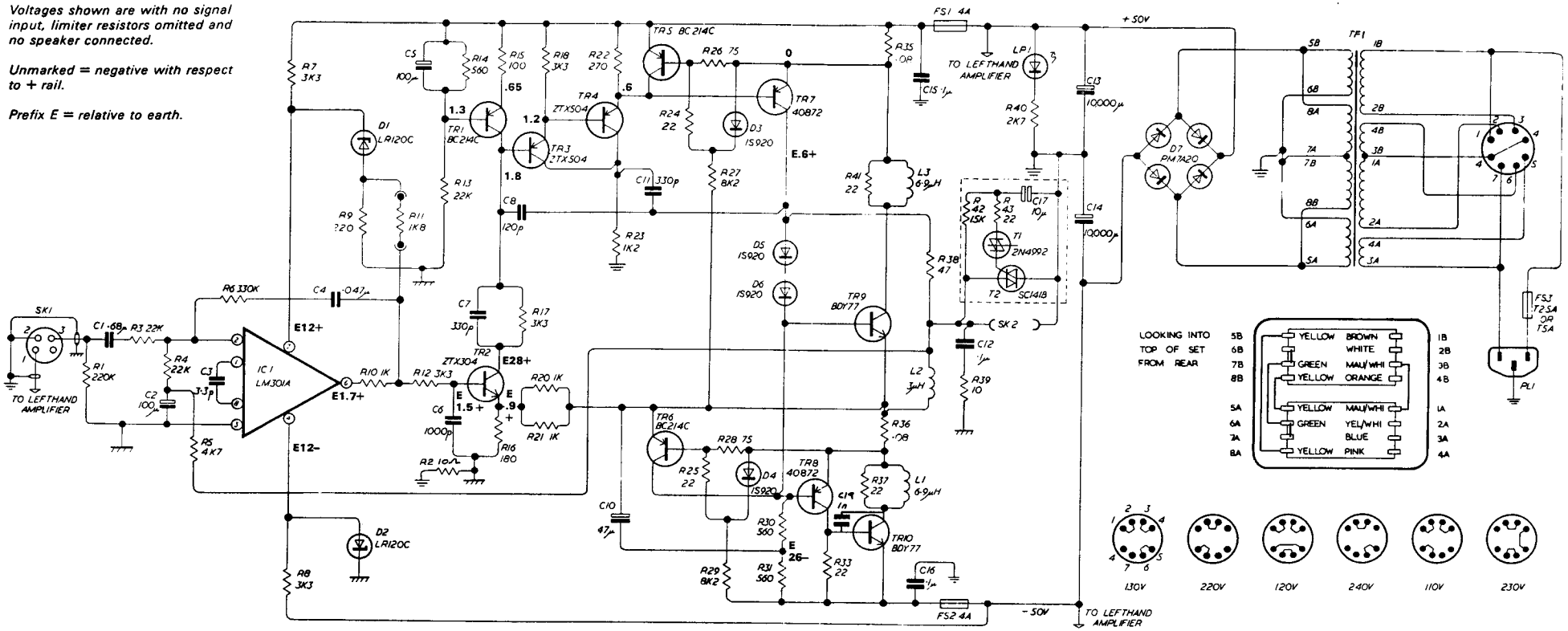

No.	Value	Tol	Reference	Stock No.
R1	220K	± 10%	Resistor	R220KJ1
R2	10	± 5%	Resistor	R10R0J1
R3	22K	± 2%	Resistor	R22K0J1
R4	22K	± 2%	Resistor	R22K0J1
R5	4.7K	± 10%	Resistor	R4K70J1
R6	330K	± 2%	Resistor	R330KJ1
R7	3K3	± 10%	Resistor	R3K30J1
R8	3K3	± 10%	Resistor	R3K30J1
R9	220	± 5%	Resistor	R220RJ1
R10	1K	± 2%	Resistor	R1K00J1
R11	1K8	± 10%	Resistor	R1K80J1
R12	3K3	± 10%	Resistor	R3K30J1
R13	22K	± 2%	Resistor	R22K0J1
R14	560	± 10%	Resistor	R560RJ1
R15	100	± 10%	Resistor	R100RJ1
R16	180	± 2%	Resistor	R180RJ1
R17	3K3	± 10%	Resistor	R3K30J1
R18	3K3	± 10%	Resistor	R3K30J1
R19				
R20	1K	± 2%	Resistor	R1K00J1
R21	1K	± 2%	Resistor	R1K00J1
R22	270	± 10%	Resistor	R270RJ1
R23	1K2	± 10%	Resistor 1.6W	R1K20JR
R24	22	± 10%	Resistor	R22R0J1
R25	22	± 10%	Resistor	R22R0J1
R26	75	± 5%	Resistor	R75R0J1

No.	Value	Tol	Reference	Stock No.
R27	8K2	± 5%	Resistor	R8K20J1
R28	75	± 5%	Resistor	R75R0J1
R29	8K2	± 5%	Resistor	R8K20J1
R30	560	± 10%	Resistor 2.5W	R560RJS
R31	560	± 10%	Resistor 2.5W	R560RJS
R33	22	± 10%	Resistor	R22R0J1
R35	0.08		Resistor	RR091JY
R36	0.08		Resistor Acoustical DRWG A4/12383	RR091JY
R37	22	± 10%	Resistor	R22R0J1
R38	47	± 5%	Resistor	R47R0J1
R39	10	± 10%	Resistor	R10R0J1
R40	2K7		Resistor 1.6W	R2K70JR
R41	22	± 10%	Resistor	R22R0J1
R42	15K	± 10%	Resistor	R15K0J1
R43	22	± 10%	Resistor	R22R0J1
C1	0.68µ		Capacitor 100V	C680NKS
C2	100µ	± 10%	Capacitor 3V	C100UME
C3	3.3P	± 20%	Capacitor	C3P30KJ
C4	0.047µ		Capacitor 250V	C47N0JS
C5	100µ		Capacitor 6V	C100UZB
C6	1,000P		Capacitor 400V	C1N00KK
C7	330P	± 20%	Capacitor	C330PKJ
C8	120P	± 5%	Capacitor	C120PJI

No.	Value	Tol	Reference	Stock No.
C9				
C10	47µ		Capacitor 40V	C47U0ZB
C11	330P		Capacitor	C330PKJ
C12	0.1µ		Capacitor 250V	C100NKC
C13	10,000µ		Capacitor 63V	C10KUTA
C14	10,000µ		Capacitor 63V	C10KUTA
C15	0.1µ		Capacitor 100V	C100NKS
C16	0.1µ		Capacitor 100V	C100NKS
C17	10µ		Capacitor 40V	C10U0ZR
C19	1000P		Capacitor	C1N00SA
TR1			Transistor BC214C	DBC214C
TR2			Transistor BC682 or ZTX304 or BCX32	DZTX304
TR3			Transistor E5458 or ZTX504	DZTX504
TR4			Transistor E5458 or ZTX504	DZTX504
TR5			Transistor BC214C	DBC214C
TR6			Transistor BC214C	DBC214C
TR7			Transistor 40872 or 2SA740	D40872X
TR8			Transistor 40872 or 2SA740	D40872X
TR9			Transistor 2SD424 or 2SD676 or 17556	D17556X
TR10			Transistor 2SD424 or 2SD676 or 17556	D17556X
T1			DIAC 2N4992 or BS08A-03	DBS08AA
T2			TRIAC SC141B or T1C2268 or T2800	DT28008

No.	Value	Tol	Reference	Stock No.
D1			Zener Diode LR120C	DZ12VAA
D2			Zener Diode LR120C	DZ12VAA
D3			Diode IS920	DIS920B
D4			Diode IS920	DIS920B
D5			Diode IS920	DIS920B
D6			Diode IS920	DIS920B
D7			Bridge Rectifier	DPM7A2Q
IC1			LM301A	DML301A
L1	6.9µH	± 20%	Inductor ANCO TC1/65	L12406A
L2	3µH	± 5%	Inductor ANCO 440/D	L12405A
L3	6.9µH	± 20%	Inductor ANCO TC1/65	L12406A
FS1	4A			UM04A0A
FS2	4A			UM04A0A
FS3	T2.5A		220-240V	UM2A5DA
	T5A		110-130V	UM05ADA
LP1			Hewlett Packard 5082-4850 Red	BL5053R
TF1			Acoustical DRG A3/12362	L12362A

THE ACOUSTICAL MFG CO LTD HUNTINGDON ENGLAND

Stock numbers listed for replacement parts, may be equivalents for original parts which are no longer available, therefore manufacturers and tolerances may vary.

QUAD 405 CIRCUIT DIAGRAM DRG No. M12333 ISS4

BOARD NUMBER M12368 ISS 9 AND 10

Voltages shown are with no signal input, limiter resistors omitted and no speaker connected.

Unmarked = negative with respect to + rail.

Prefix E = relative to earth.

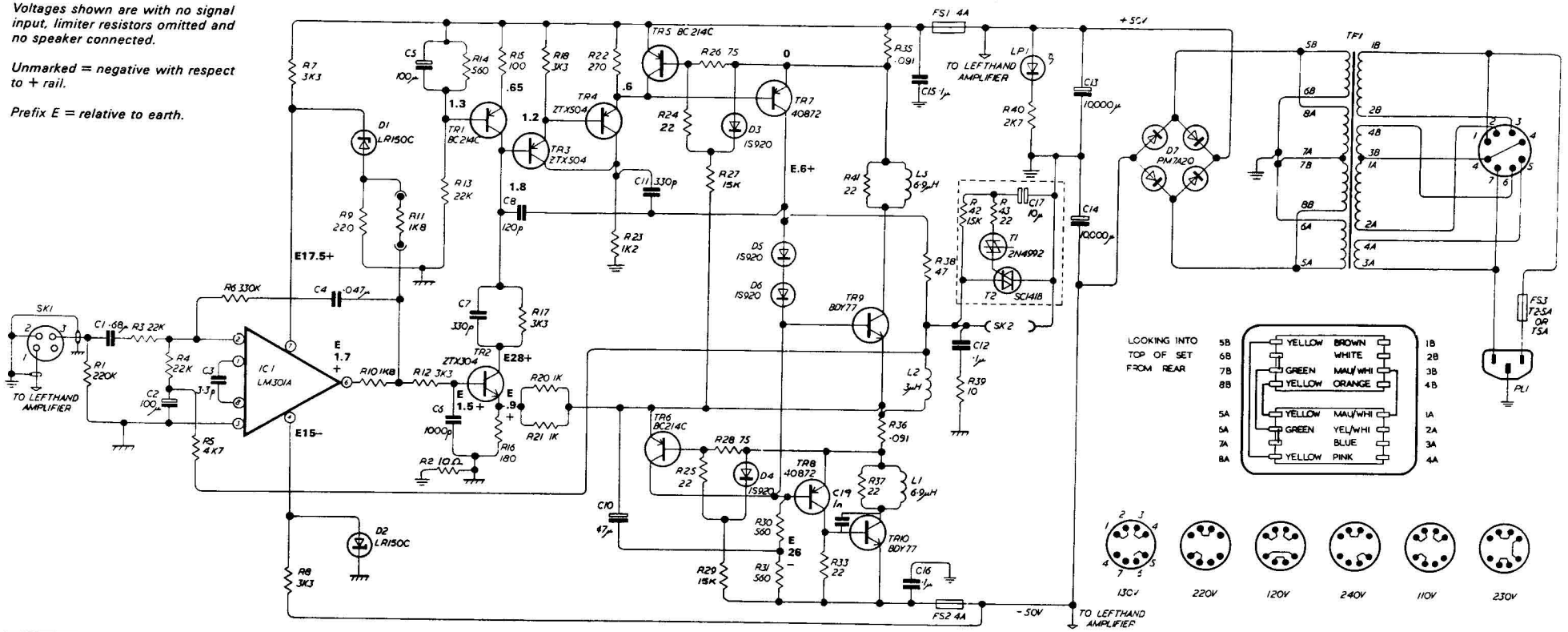

No.	Value	Tol	Reference	Stock No.
R1	220K	± 10%	Resistor	R220KJ1
R2	10	± 5%	Resistor	R10R0J1
R3	22K	± 2%	Resistor	R22K0J1
R4	22K	± 2%	Resistor	R22K0J1
R5	4.7K	± 10%	Resistor	R4K70J1
R6	330K	± 2%	Resistor	R330KJ1
R7	3K3	± 10%	Resistor	R3K30J1
R8	3K3	± 10%	Resistor	R3K30J1
R9	220	± 5%	Resistor	R220RJ1
R10	1K8	± 10%	Resistor	R1K80J1
R11	1K8	± 10%	Resistor	R1K80J1
R12	3K3	± 10%	Resistor	R3K30J1
R13	22K	± 2%	Resistor	R22K0J1
R14	560	± 10%	Resistor	R560RJ1
R15	100	± 10%	Resistor	R100RJ1
R16	180	± 2%	Resistor	R180RJ1
R17	3K3	± 10%	Resistor	R3K30J1
R18	3K3	± 10%	Resistor	R3K30J1
R19				
R20	1K	± 2%	Resistor	R1K00J1
R21	1K	± 2%	Resistor	R1K00J1
R22	270	± 10%	Resistor	R270RJ1
R23	1K2	± 10%	Resistor 1.6W	R1K20JR
R24	22	± 10%	Resistor	R22R0J1
R25	22	± 10%	Resistor	R22R0J1
R26	75	± 5%	Resistor	R75R0J1

No.	Value	Tol	Reference	Stock No.
R27	15K	± 5%	Resistor	R15K0J1
R28	75	± 5%	Resistor	R75R0J1
R29	15K	± 5%	Resistor	R15K0J1
R30	560	± 10%	Resistor 2.5W	R560RJS
R31	560	± 10%	Resistor 2.5W	R560RJS
R33	22	± 10%	Resistor	R22R0J1
R35	·0.091		Resistor	RR091JY
R36	0.091		Resistor	RR091JY
R37	22	± 10%	Resistor	R22R0J1
R38	47	± 5%	Resistor	R47R0J1
R39	10	± 10%	Resistor	R10R0J1
R40	2K7		Resistor 1.6W	R2K70JR
R41	22	± 10%	Resistor	R22R0J1
R42	15K	± 10%	Resistor	R15K0J1
R43	22	± 10%	Resistor	R22R0J1
C1	0.68μ		Capacitor 100V	C680NKS
C2	100μ	± 10%	Capacitor 3V	C100UME
C3	3.3P	± 20%	Capacitor	C3P30KJ
C4	0.047μ		Capacitor 250V	C47N0JS
C5	100μ		Capacitor 6V	C100UZB
C6	1000P		Capacitor 400V	C1N00KK
C7	330P	± 20%	Capacitor	C330PKJ
C8	120P	± 5%	Capacitor	C120PJI

No.	Value	Tol	Reference	Stock No.
C9				
C10	47μ		Capacitor 40V	C47U0ZB
C11	330P		Capacitor	C330PKJ
C12	0.1μ		Capacitor 250V	C100NKC
C13	10,000μ		Capacitor 63V	C10KUTA
C14	10,000μ		Capacitor 63V	C10KUTA
C15	0.1μ		Capacitor 100V	C100NKS
C16	0.1μ		Capacitor 100V	C100NKS
C17	10μ		Capacitor 40V	C10U0ZR
C19	1000P		Capacitor	C1N00SA
TR1			Transistor BC214C	DBC214C
TR2			Transistor BC682 or ZTX304 or BCX32	DZTX304
TR3			Transistor E5458 or ZTX504	DZTX504
TR4			Transistor E5458 or ZTX504	DZTX504
TR5			Transistor BC214C	DBC214C
TR6			Transistor BC214C	DBC214C
TR7			Transistor 40872 or 2SA740	D40872X
TR8			Transistor 40872 or 2SA740	D40872X
TR9			Transistor 2SD424 or 2SD676 or 17556	D17556X
TR10			Transistor 2SD424 or 2SD676 or 17556	D17556X
T1			DIAC 2N4992 or BS08A-03	DBS08AA
T2			TRIAC SC141B or T1C226B or T2800	DT2800B

No.	Value	Tol	Reference	Stock No.
D1			Zener Diode LR150C	DZ15VAA
D2			Zener Diode LR150C	DZ15VAA
D3			Diode IS920	DIS920B
D4			Diode IS920	DIS920B
D5			Diode IS920	DIS920B
D6			Diode IS920	DIS920B
D7			Bridge Rectifier	DPM7A2Q
IC1			LM301A	DML301A
L1	6.9μH	± 20%	Inductor ANCO TC1/65	L12406A
L2	3μH	± 5%	Inductor ANCO 440/D	L12405A
L3	6.9μH	± 20%	Inductor ANCO TC1/65	L12406A
FS1	4A			UM04AQA
FS2	4A			UM04AQA
FS3	T2.5A		220-240V	UM2A5DA
	T5A		110-130V	UM05ADA
LP1			Hewlett Packard 5082-4850 Red	BL5053R
TF1			Acoustical DRG A3/1236Z	L12362A

Stock numbers listed for replacement parts, may be equivalents for original parts which are no longer available, therefore manufacturers and tolerances may vary.

BOARD NUMBER M12368 ISS 9 AND 10

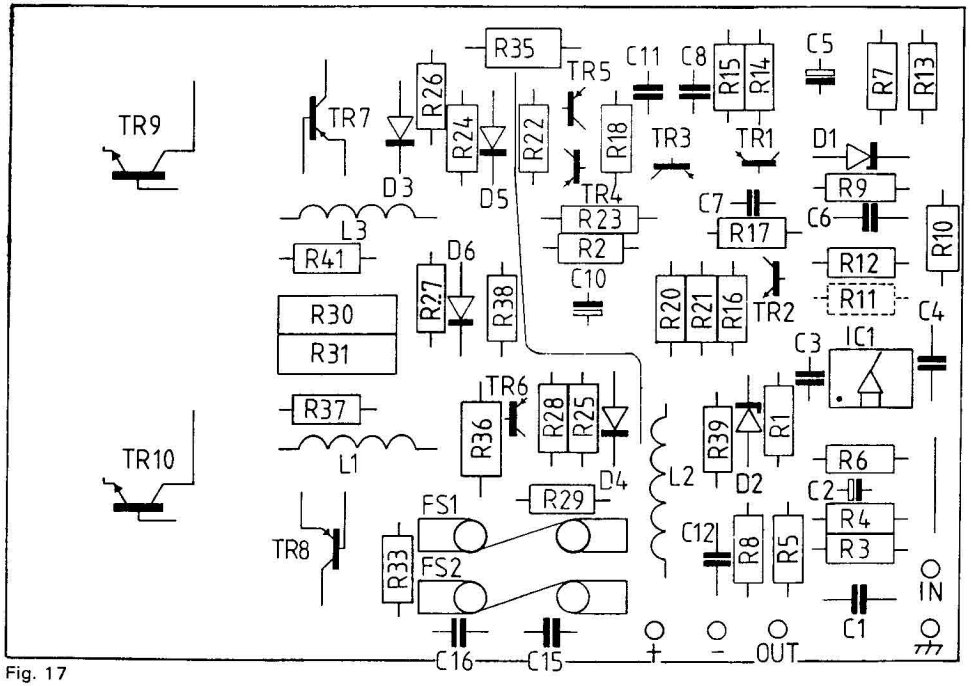

Fig. 17

BOARD NUMBER M12565 ISS 3

Voltages shown are with no signal input, limiter resistors omitted and no speaker connected.

Unmarked = negative with respect to + rail.

Prefix E = relative to earth.

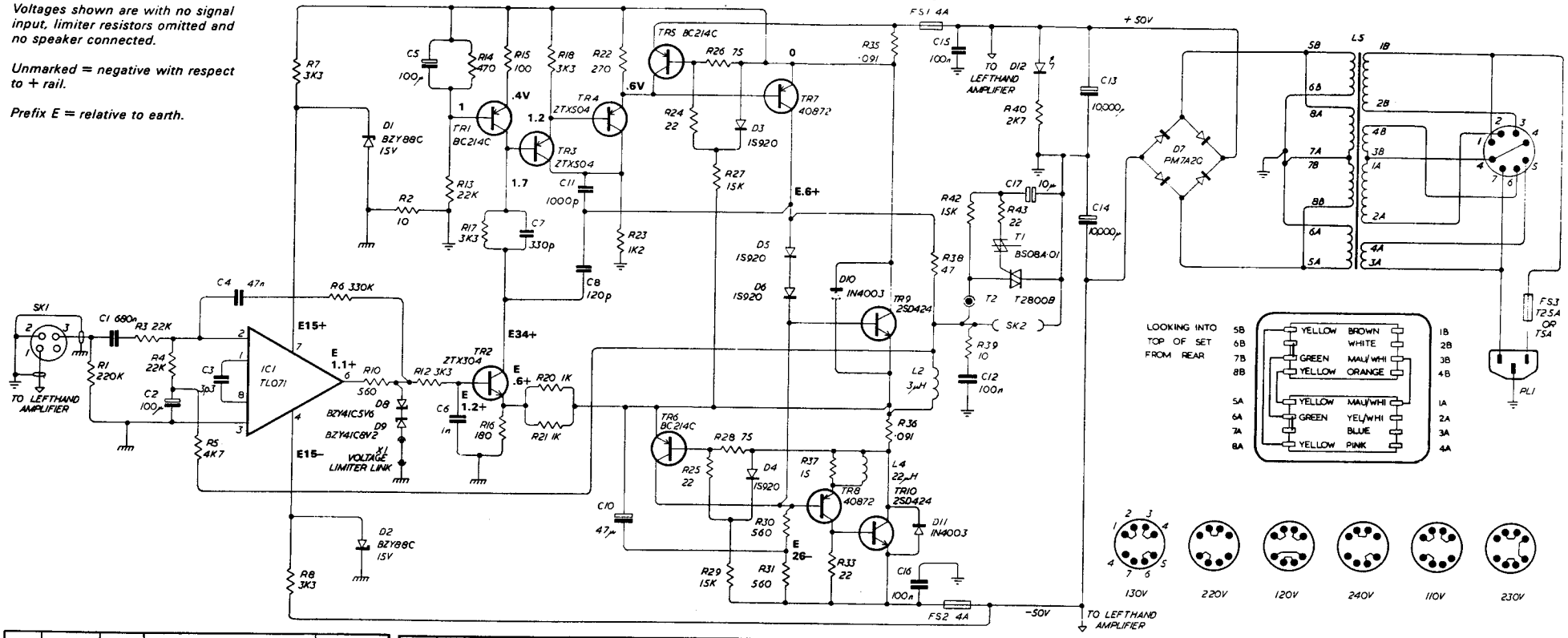

No.	Value	Tol	Reference	Stock No.
R1	220K		Resistor	R220KJ1
R2	10		Resistor	R10R0J1
R3	22K	± 2%	Resistor	R22K0G1
R4	22K	± 2%	Resistor	R22K0G1
R5	4K7		Resistor	R4K70J1
R6	330K	± 2%	Resistor	R330KG1
R7	3K3		Resistor	R3K30J1
R8	3K3		Resistor	R3K30J1
R10	560		Resistor	R560RJ1
R12	3K3		Resistor	R3K30J1
R13	22K	± 2%	Resistor	R22K0G1
R14	470		Resistor	R470RJ1
R15	100		Resistor	R100RJ1
R16	180	± 2%	Resistor	R180RG1
R17	3K3		Resistor	R3K30J1
R18	3K3		Resistor	R3K30J1
R20	1K	± 2%	Resistor	R1K00G1
R21	1K	± 2%	Resistor	R1K00G1
R22	270		Resistor	R270RJ1
R23	1K2		Resistor	R1K20JR
R24	22		Resistor	R22R0J1
R25	22		Resistor	R22R0J1
R26	75		Resistor	R75R0J1

No.	Value	Tol	Reference	Stock No.
R27	15K		Resistor	R15K0J1
R28	75		Resistor	R75R0J1
R29	15K		Resistor	R15K0J1
R30	560		Resistor	R560RJS
R31	560		Resistor	R560RJS
R33	22		Resistor	R22R0J1
R35	.091		Resistor	RR091JY
R36	.091		Resistor	RR091JY
R37	15		Resistor	R15R0J1
R38	47		Resistor	R47R0J1
R39	10		Resistor	R10R0J1
R40	2K7		Resistor	R2K70JR
R42	15K		Resistor	R15K0J1
R43	22		Resistor	R22R0J1
			All Resistors ± 5% except where shown	
C1	680n		Capacitor	C680NKS
C2	100μ		Capacitor	C100UKT
C3	3p3		Capacitor	C3P30C1
C4	47n		Capacitor	C47N0JS
C5	100μ		Capacitor	C100UZB
C6	1n		Capacitor	C1N00KK
C7	330p		Capacitor	C330PKJ

No.	Value	Tol	Reference	Stock No.
C8	120p		Capacitor	C120PJI
C10	47μ		Capacitor	C47U0ZB
C11	1000p		Capacitor	C1K0PKJ
C12	100N		Capacitor	C100NJS
C13	10,000μ		Capacitor	C10KUTA
C14	10,000μ		Capacitor	C10KUTA
C15	100N		Capacitor	C100NKS
C16	100N		Capacitor	C100NKS
C17	10μ		Capacitor	C10U0ZR
TR1			Transistor BC 214C	DBC214C
TR2			Transistor ZTX304	DZTX304
TR3			Transistor ZTX504	DZTX504
TR4			Transistor ZTX504	DZTX504
TR5			Transistor BC214C	DBC214C
TR6			Transistor BC214C	DBC214C
TR7			Transistor 40872	D40872X
TR8			Transistor 40872	D40872X
TR9			Transistor 17556 or 2SD424	D17556X
TR10			Transistor 17556 or 2SD424	D17556X
T1			DIAC BS08A-01 or 2N4992	DBS08AA
T2			TRIAC T2800B	DT2800B
D1			Zener Diode BZY88C 15V	DZ15VAA

No.	Value	Tol	Reference	Stock No.
D2			Zener Diode BZY88C 15V	DZ15VAA
D3			Diode 1S920TB	D1S920B
D4			Diode 1S920TB	D1S920B
D5			Diode 1S920TB	D1S920B
D6			Diode 1S920TB	D1S920B
D7			Bridge Rectifier PM7A2Q	DPM7A2Q
D8			Zener Diode BZV41C8V2	DZ8V2AA
D9			Zener Diode BZV41C5V6	DZ5V6AA
D10			Diode 1N4003	D1N4003
D11			Diode 1N4003	D1N4003
D12			LED XC5053R	BL5053R
IC1			Int. Circuit TL071,ME5534,LM351,LM301	DO71CPX
L2	3μH	± 5%	Choke	L12405A
L4	22μH		Choke	LSC1022
L5			Transformer	L12362A
FS1	4A		Fuse	UM04AQU
FS2	4A		Fuse	UM04AQU
FS3	T2A5		Fuse 220-240V	UM2A5DA
	T5A		Fuse 110-130V	UM05ADA
X1			Link	PP37712

QUAD ELECTROACOUSTICS LTD HUNTINGDON ENGLAND

Stock numbers listed for replacement parts, may be equivalents for original parts which are no longer available, therefore manufacturers and tolerances may vary.

QUAD 405 CIRCUIT DIAGRAM DRG No. M12333 6

BOARD NUMBER M12565 ISS 3

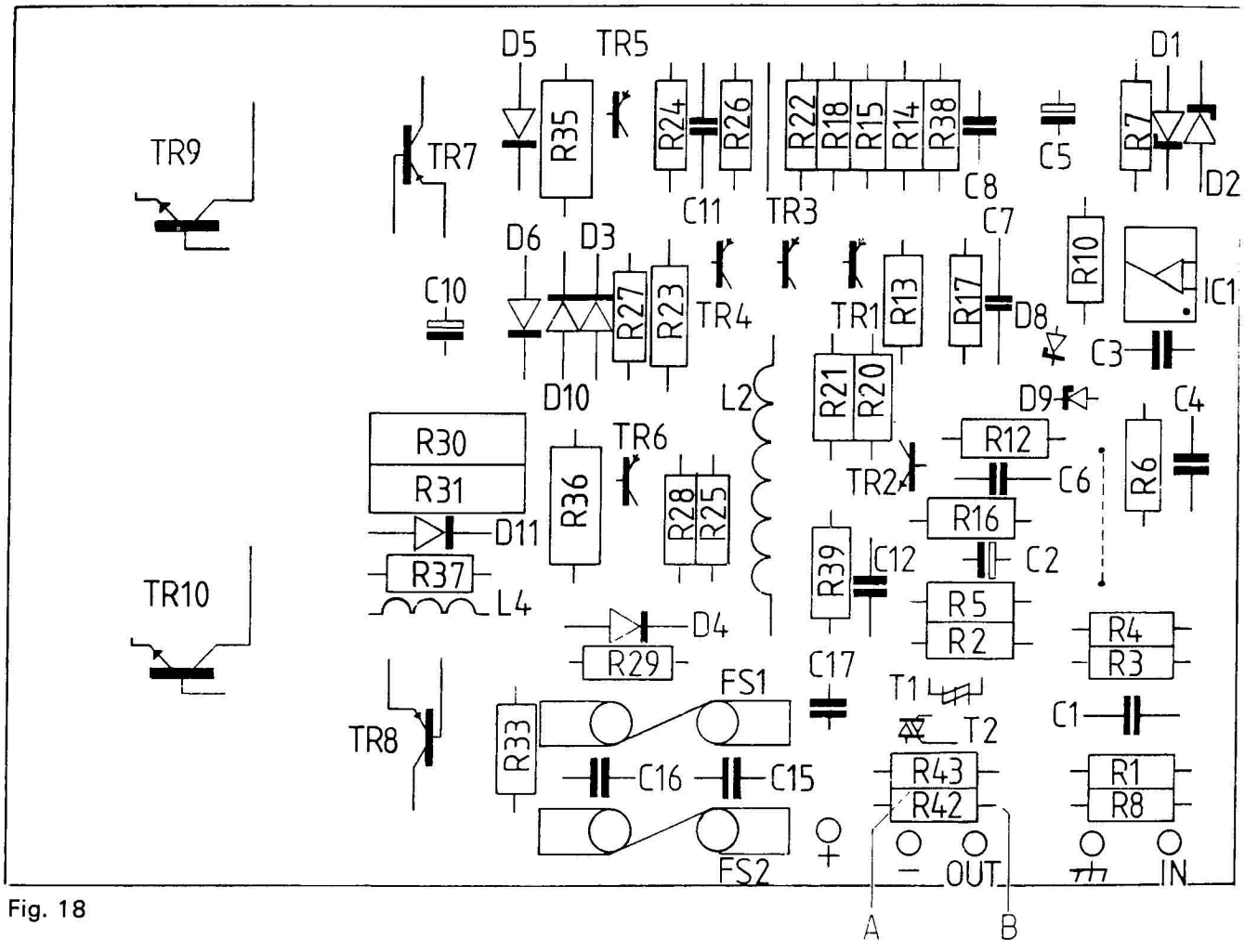

Fig. 18

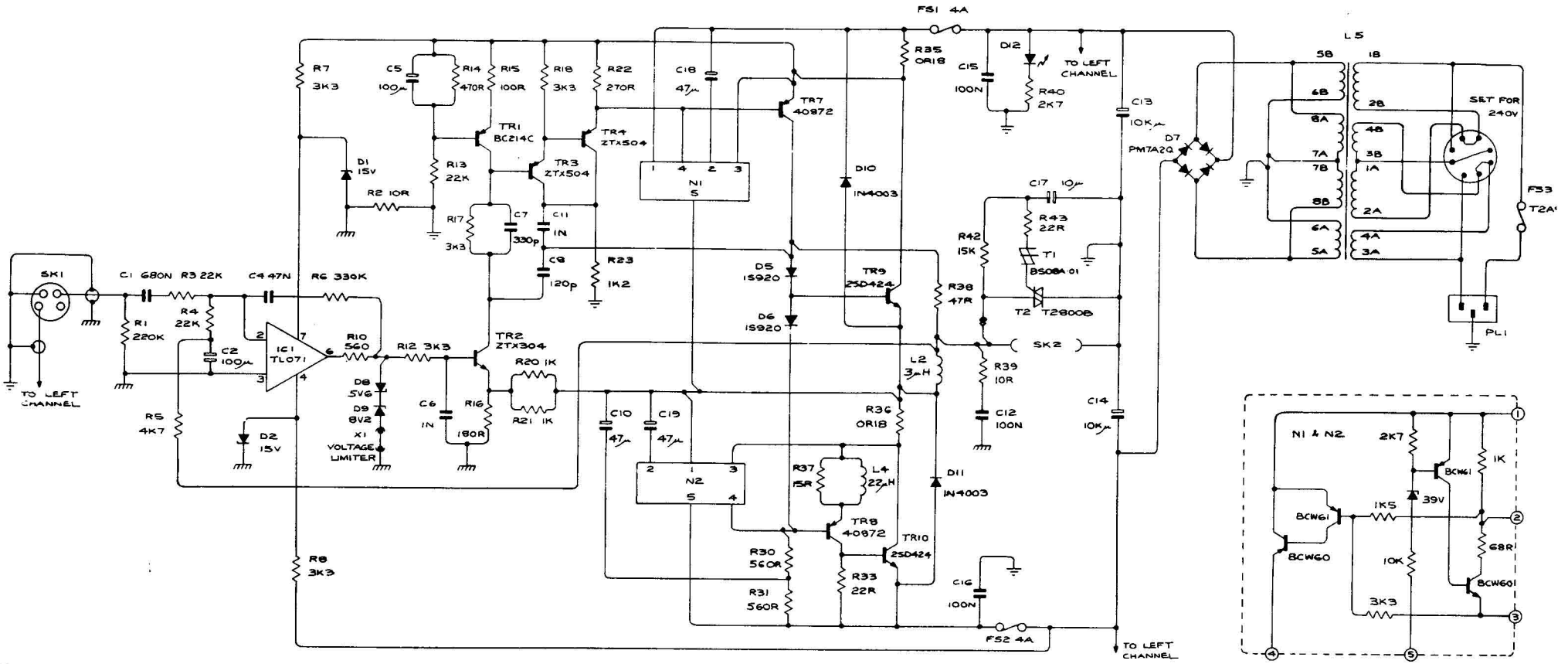

R1	RESISTOR	220K	±5%	R220KJ1
R2	RESISTOR	10R	±5%	R10R0J1
R3	RESISTOR	22K	±2%	R22K0G1
R4	RESISTOR	22K	±2%	R22K0G1
R5	RESISTOR	4K7	±5%	R4K70J1
R6	RESISTOR	330K	±2%	R330KG1
R7	RESISTOR	3K3	±5%	R3K30J1
R8	RESISTOR	3K3	±5%	R3K30J1
R10	RESISTOR	560R	±5%	R560RJ1
R12	RESISTOR	3K3	±5%	R3K30J1
R13	RESISTOR	22K	±2%	R22K0G1
R14	RESISTOR	470R	±5%	R470RJ1
R15	RESISTOR	100R	±5%	R100RJ1
R16	RESISTOR	180R	±2%	R180RG1
R17	RESISTOR	3K3	±5%	R3K30J1
R18	RESISTOR	3K3	±5%	R3K30J1
R20	RESISTOR	1K	±2%	R1K00G1
R21	RESISTOR	1K	±2%	R1K00G1
R22	RESISTOR	270R	±5%	R270RJ1
R23	RESISTOR	1K2	±5%	R1K20JR
R30	RESISTOR	560R	±5%	R560RJC
R31	RESISTOR	560R	±5%	R560RJC
R33	RESISTOR	22R	±5%	R22R0J1
R35	RESISTOR	0R18	±5%	R0R18JC
R36	RESISTOR	0R18	±5%	R0R18JC
R37	RESISTOR	15R	±5%	R15R0J1

R38	RESISTOR	47R	±5%	R47R0J1
R39	RESISTOR	10R	±5%	R10R0J1
R40	RESISTOR	2K7	±5%	R2K70JR
R42	RESISTOR	15K	±5%	R15K0J1
R43	RESISTOR	22R	±5%	R22R0J1
C1	CAPACITOR	680N		C680NKS
C2	CAPACITOR	100µ		C100WJ
C4	CAPACITOR	47N		C47N0JS
C5	CAPACITOR	100µ		C100UZB
C6	CAPACITOR	1N		C1N00JP
C7	CAPACITOR	330P		C330PKJ
C8	CAPACITOR	120P		C120PJ1
C10	CAPACITOR	47µ		C47U0ZB
C11	CAPACITOR	1N		C1N00SA
C12	CAPACITOR	100N		C100NJS
C13	CAPACITOR	10K µ		C10KUTA
C14	CAPACITOR	10K µ		C10KUTA
C15	CAPACITOR	100N		C100NKS
C16	CAPACITOR	100N		C100NKS
C17	CAPACITOR	10µ		C10U0ZR
C18	CAPACITOR	47µ		C47U0ZE
C19	CAPACITOR	47µ		C47U0ZE

TR1	TRANSISTOR	BC214C		DBC214C
TR2	TRANSISTOR	ZTX304		DZTX304
TR3	TRANSISTOR	ZTX504		DZTX504
TR4	TRANSISTOR	ZTX504		DZTX504
TR7	TRANSISTOR	40872		D40872X
TR8	TRANSISTOR	40872		D40872X
TR9	TRANSISTOR	2SD424		D2SD424
TR10	TRANSISTOR	2SD424		D2SD424
T1	DIAC	BS08A-01		DBS08AA
T2	TRIAC	T2800B		DT2800B
D1	ZENER	DIODE	BZY88C 15V	DB815VA
D2	ZENER	DIODE	BZY88C 15V	DB815VA
D5	DIODE	1S920		DIS920B
D6	DIODE	1S920		DIS920B
D7	BRIDGE	RECTIFIER	PM7A2Q	DPM7A2Q
D8	ZENER	DIODE	BZY41C 5V6	DZ5V6AA
D9	ZENER	DIODE	BZY41C 8V2	DZ8V2AA
D10	DIODE	1N4003		DIN4003
D11	DIODE	1N4003		DIN4003
D12	LED	XC5053R		BL5053R
X1	SHORTING LINK			PP37712
IC1	INT CIRCUIT	TL071		D071CPX

FS1	FUSE	4A		UM04AQU
FS2	FUSE	4A		UM04AQU
FS3	FUSE	T2A5	220-240V	UM2A5DA
		T5A	110-130V	UM05ADA
L5	MAINS	TRANSFORMER		L12362A
L2		CHOKE	3µH	L12405A
L4		CHOKE	22µH	L4T220K
N1		NETWORK		Q05N1AW
N2		NETWORK		Q05N1AW

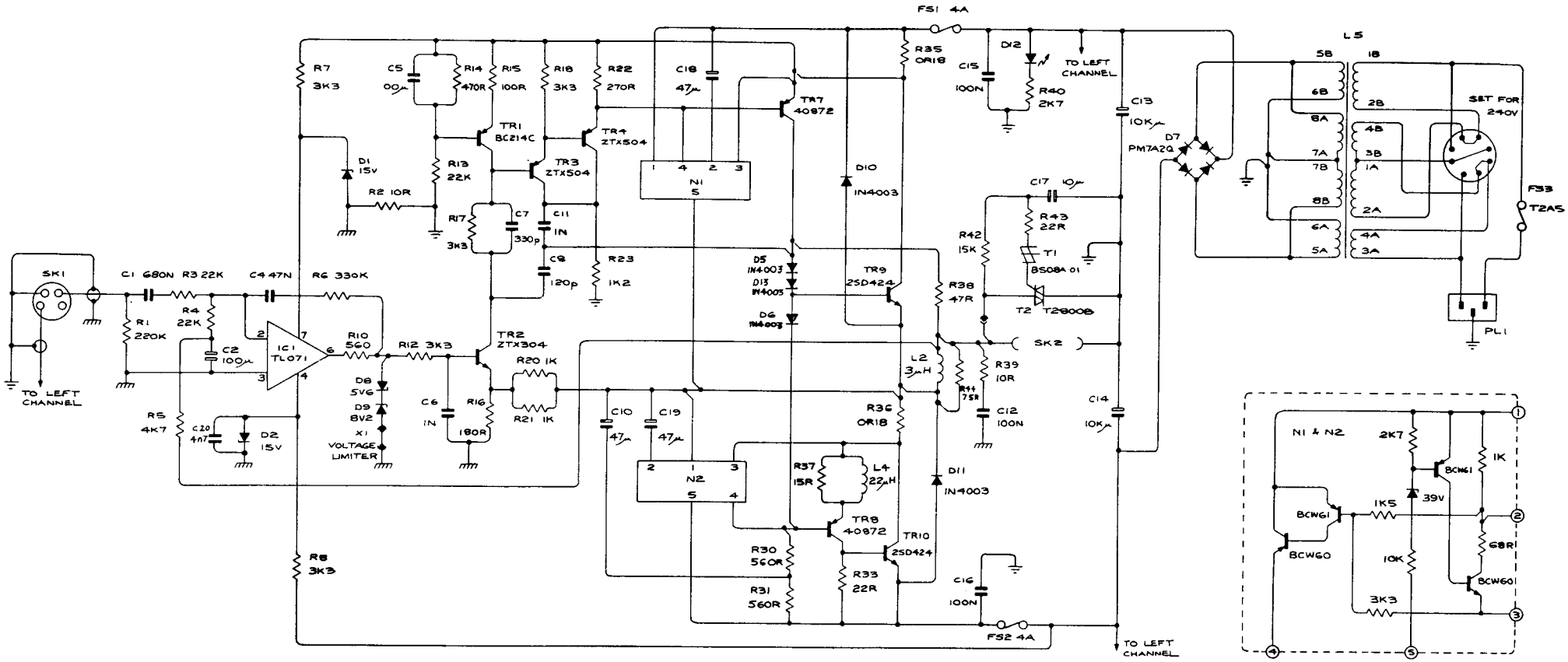

R1	RESISTOR	220K	±5%	R220KJ1
R2	RESISTOR	10R	±5%	R10ROJ1
R3	RESISTOR	22K	±2%	R22K061
R4	RESISTOR	22K	±2%	R22K061
R5	RESISTOR	4K7	±5%	R4K70J1
R6	RESISTOR	330K	±2%	R330KG1
R7	RESISTOR	3K3	±5%	R3K30J1
R8	RESISTOR	3K3	±5%	R3K30J1
R10	RESISTOR	560R	±5%	R560RJ1
R12	RESISTOR	3K3	±5%	R3K30J1
R13	RESISTOR	22K	±2%	R22K061
R14	RESISTOR	470R	±5%	R470RJ1
R15	RESISTOR	100R	±5%	R100RJ1
R16	RESISTOR	180R	±2%	R180RG1
R17	RESISTOR	3K3	±5%	R3K30J1
R18	RESISTOR	3K3	±5%	R3K30J1
R20	RESISTOR	1K	±2%	R1K00G1
R21	RESISTOR	1K	±2%	R1K00G1
R22	RESISTOR	270R	±5%	R270RJ1
R23	RESISTOR	1K2	±5%	R1K20JR
R30	RESISTOR	560R	±5%	R560RJC
R31	RESISTOR	560R	±5%	R560RJC
R33	RESISTOR	22R	±5%	R22ROJ1
R35	RESISTOR	OR18	±5%	ROR18JC
R36	RESISTOR	OR18	±5%	ROR18JC
R37	RESISTOR	15R	±5%	R15ROJ1

R38	RESISTOR	47R	±5%	R47ROJ1
R39	RESISTOR	10R	±5%	R10ROJ1
R40	RESISTOR	2K7	±5%	R2K70JR
R42	RESISTOR	15K	±5%	R15K0J1
R43	RESISTOR	22R	±5%	R22ROJ1
R44	RESISTOR	75R	±5%	R75ROJ1
C1	CAPACITOR	680N		C680NKS
C2	CAPACITOR	100µ		C100WJJ
C4	CAPACITOR	47N		C47NOJS
C5	CAPACITOR	100µ		C100UZB
C6	CAPACITOR	1N		C1N00JP
C7	CAPACITOR	330P		C330PKJ
C8	CAPACITOR	120P		C120PJ1
C10	CAPACITOR	47µ		C47U0ZB
C11	CAPACITOR	1N		C1N00SA
C12	CAPACITOR	100N		C100NJS
C13	CAPACITOR	10Kµ		C10KUTA
C14	CAPACITOR	10Kµ		C10KUTA
C15	CAPACITOR	100N		C100NKS
C16	CAPACITOR	100N		C100NKS
C17	CAPACITOR	10µ		C10U0ZR
C18	CAPACITOR	47µ		C47U0ZE
C19	CAPACITOR	47µ		C47U0ZE
C20	CAPACITOR	4N7		C4N7 15J

TR1	TRANSISTOR	BC214C	DBC214C
TR2	TRANSISTOR	ZTX304	DZTX304
TR3	TRANSISTOR	ZTX504	DZTX504
TR4	TRANSISTOR	ZTX504	DZTX504
TR7	TRANSISTOR	40872	D40872X
TR8	TRANSISTOR	40872	D40872X
TR9	TRANSISTOR	2SD424	D2SD424
TR10	TRANSISTOR	2SD424	D2SD424
T1	DIAC	BS08A-01	DBS08AA
T2	TRIAC	T2800B	DT2800B
D1	ZENER DIODE	BZY88C 15V	DBS15VA
D2	ZENER DIODE	BZY88C 15V	DBS15VA
D5	DIODE	1N4003	DIN4003
D6	DIODE	1N4003	DIN4003
D7	BRIDGE RECTIFIER	PM7A2Q	DPM7A2Q
D8	ZENER DIODE	BZY41C 5V6	DZ5V6AA
D9	ZENER DIODE	BZY41C 8V2	DZ8V2AA
D10	DIODE	1N4003	DIN4003
D11	DIODE	1N4003	DIN4003
D12	LED	XC5053R	BL5053R
D13	DIODE	1N4003	DIN4003
X1	SHORTING LINK		PP37712
IC1	INT. CIRCUIT	TL071	D071CPX

FS1	FUSE	4A		UM04AQU
FS2	FUSE	4A		UM04AQU
FS3	FUSE	T2A5	220-240V	UM2A5DA
		T5A	110-130V	UM05ADA
L5	MAINS	TRANSFORMER		L12362A
L2		CHOKE	3µH	L12405A
L4		CHOKE	22µH	L4T220K
N1		NETWORK		Q05N1AW
N2		NETWORK		Q05N1AW

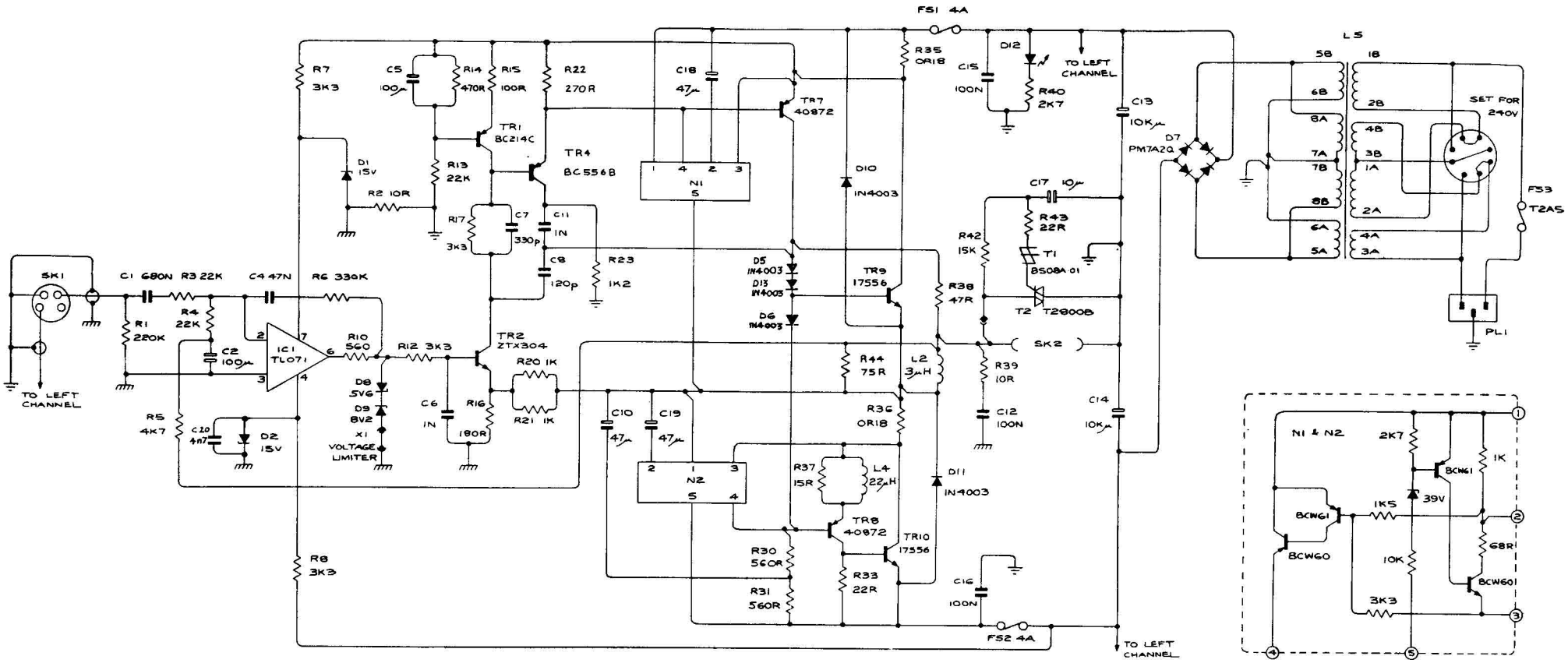

R1	RESISTOR	220K	±5%	R220KJ4
R2	RESISTOR	10R	±5%	R10ROJ1
R3	RESISTOR	22K	±2%	R22KOG1
R4	RESISTOR	22K	±2%	R22KOG1
R5	RESISTOR	4K7	±5%	R4K7OJ4
R6	RESISTOR	330K	±2%	R330KG1
R7	RESISTOR	3K3	±5%	R3K3OJ1
R8	RESISTOR	3K3	±5%	R3K3OJ1
R10	RESISTOR	560R	±5%	R560RJ4
R12	RESISTOR	3K3	±5%	R3K3OJ1
R13	RESISTOR	22K	±2%	R22KOG1
R14	RESISTOR	470R	±5%	R470RJ4
R15	RESISTOR	100R	±5%	R100RJ4
R16	RESISTOR	180R	±2%	R180RG1
R17	RESISTOR	3K3	±5%	R3K3OJ1
R20	RESISTOR	1K	±2%	R1K00G1
R21	RESISTOR	1K	±2%	R1K00G1
R22	RESISTOR	270R	±5%	R270RJ4
R23	RESISTOR	1K2	±5%	R1K2OJR
R30	RESISTOR	560R	±5%	R560RJC
R31	RESISTOR	560R	±5%	R560RJC
R33	RESISTOR	22R	±5%	R22ROJ4
R35	RESISTOR	0R18	±5%	R0R18JC
R36	RESISTOR	0R18	±5%	R0R18JC
R37	RESISTOR	15R	±5%	R15ROJ4

R38	RESISTOR	47R	±5%	R47ROJ4
R39	RESISTOR	10R	±5%	R10ROJ1
R40	RESISTOR	2K7	±5%	R2K7OJR
R42	RESISTOR	15K	±5%	R15KOJ4
R43	RESISTOR	22R	±5%	R22ROJ4
R44	RESISTOR	75R	±5%	R75ROJ4
C1	CAPACITOR	680N		C680NKA
C2	CAPACITOR	100μ		C100UJJ
C4	CAPACITOR	47N		C47NOJS
C5	CAPACITOR	100μ		C100UME
C6	CAPACITOR	1N		C1N00JP
C7	CAPACITOR	330P		C330PKJ
C8	CAPACITOR	120P		C120PJ1
C10	CAPACITOR	47μ		C47U0ZB
C11	CAPACITOR	1N		C1N00SA
C12	CAPACITOR	100N		C100NJS
C13	CAPACITOR	10Kμ		C10KUTB
C14	CAPACITOR	10Kμ		C10KUTB
C15	CAPACITOR	100N		C100NKS
C16	CAPACITOR	100N		C100NKS
C17	CAPACITOR	10μ		C10U0ZR
C18	CAPACITOR	47μ		C47U0ZE
C19	CAPACITOR	47μ		C47U0ZE
C20	CAPACITOR	4N7		C4N7OSJ

TR1	TRANSISTOR	BC214C	DBC214C
TR2	TRANSISTOR	ZTX304	DZTX304
TR4	TRANSISTOR	BC556B	DBC556B
TR7	TRANSISTOR	40872	D40872X
TR8	TRANSISTOR	40872	D40872X
TR9	TRANSISTOR	17556	D17556X
TR10	TRANSISTOR	17556	D17556X
T1	DIAC	BS08A-01	DBS08AA
T2	TRIAC	T2800B	DT2800B
D1	ZENER DIODE	BZY88C 15V	DBS15VA
D2	ZENER DIODE	BZY88C 15V	DBS15VA
D5	DIODE	IN4003	DIN4003
D6	DIODE	IN4003	DIN4003
D7	BRIDGE RECTIFIER	PM7A2Q	DPM7A2Q
D8	ZENER DIODE	BZY41C 5V6	DZ5V6AA
D9	ZENER DIODE	BZY41C 8V2	DZ8V2AA
D10	DIODE	IN4003	DIN4003
D11	DIODE	IN4003	DIN4003
D12	LED	XC5053R	BL5053R
D13	DIODE	IN4003	DIN4003
X1	SHORTING LINK		Q05LINK
IC1	INT. CIRCUIT	TL071	D071CPX

FS1	FUSE	4A		UM04AQU
FS2	FUSE	4A		UM04AQU
FS3	FUSE	T2A5	220-240V	UM2A5DA
		T5A	110-130V	UM05ADA
L5	MAINS	TRANSFORMER		L12362A
L2		CHOKE	3μH	L12405A
L4		CHOKE	22μH	L4T220K
N1		NETWORK		Q05NIAT
N2		NETWORK		Q05NIAT

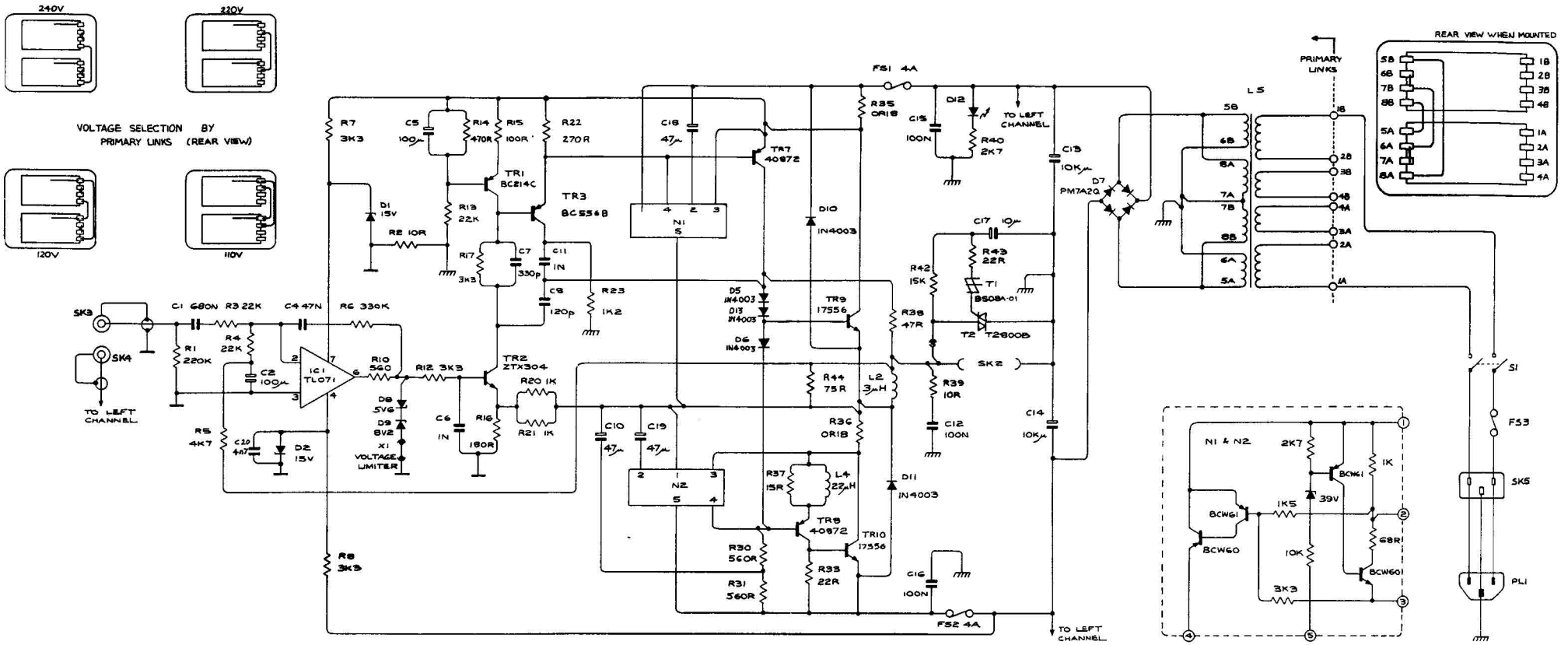

R1	RESISTOR	220K	±5%	R220KJ4
R2	RESISTOR	10R	±5%	R10ROJ1
R3	RESISTOR	22K	±2%	R22K0G1
R4	RESISTOR	22K	±2%	R22K0G1
R5	RESISTOR	4K7	±5%	R4K70J4
R6	RESISTOR	330K	±2%	R330KG1
R7	RESISTOR	3K3	±5%	R3K30J1
R8	RESISTOR	3K3	±5%	R3K30J1
R10	RESISTOR	560R	±5%	R560RJ4
R12	RESISTOR	3K3	±5%	R3K30J1
R13	RESISTOR	22K	±2%	R22K0G1
R14	RESISTOR	470R	±5%	R470RJ4
R15	RESISTOR	100R	±5%	R100RJ4
R16	RESISTOR	180R	±2%	R180RG1
R17	RESISTOR	3K3	±5%	R3K30J1
R20	RESISTOR	1K	±2%	R1K00G1
R21	RESISTOR	1K	±2%	R1K00G1
R22	RESISTOR	270R	±5%	R270RJ4
R23	RESISTOR	1K2	±5%	R1K20JR
R30	RESISTOR	560R	±5%	R560RJC
R31	RESISTOR	560R	±5%	R560RJC
R33	RESISTOR	22R	±5%	R22ROJ4
R35	RESISTOR	0R18	±5%	R0R18JC
R36	RESISTOR	0R18	±5%	R0R18JC
R37	RESISTOR	15R	±5%	R15ROJ4

R38	RESISTOR	47R	±5%	R47ROJ4
R39	RESISTOR	10R	±5%	R10ROJ1
R40	RESISTOR	2K7	±5%	R2K70JR
R42	RESISTOR	15K	±5%	R15K0J4
R43	RESISTOR	22R	±5%	R22ROJ4
R44	RESISTOR	75R	±5%	R75R0J4
C1	CAPACITOR	680N		C680NKA
C2	CAPACITOR	100µ		C100UJJ
C4	CAPACITOR	47N		C47NOJS
C5	CAPACITOR	100µ		C100UME
C6	CAPACITOR	1N		C1N00JP
C7	CAPACITOR	330P		C330PKJ
C8	CAPACITOR	120P		C120PJ1
C10	CAPACITOR	47µ		C47U0ZB
C11	CAPACITOR	1N		C1N00GA
C12	CAPACITOR	100N		C100NJS
C13	CAPACITOR	10K µ		C10KUTB
C14	CAPACITOR	10K µ		C10KUTB
C15	CAPACITOR	100N		C100NKS
C16	CAPACITOR	100N		C100NKS
C17	CAPACITOR	10µ		C10U0ZR
C18	CAPACITOR	47µ		C47U0ZE
C19	CAPACITOR	47µ		C47U0ZE
C20	CAPACITOR	4N7		C4N7067

TR1	TRANSISTOR	BC214C	DBC214C
TR2	TRANSISTOR	ZTX304	DZTX304
TR3	TRANSISTOR	BC556B	DBC556B
TR7	TRANSISTOR	40872	D40872X
TR8	TRANSISTOR	40872	D40872X
TR9	TRANSISTOR	17556	D17556X
TR10	TRANSISTOR	17556	D17556X
T1	DIAC	BS08A-01	DBS08AA
T2	TRIAC	T2800B	DT2800B
D1	ZENER DIODE	BZY88C 15V	DBS15VA
D2	ZENER DIODE	BZY88C 15V	DBS15VA
D5	DIODE	IN4003	DIN4003
D6	DIODE	IN4003	DIN4003
D7	BRIDGE RECTIFIER	PM7A2Q	DPM7A2Q
D8	ZENER DIODE	BZY4HC 5V6	DZ5V6AA
D9	ZENER DIODE	BZY4HC 8V2	DZ8V2AA
D10	DIODE	IN4003	DIN4003
D11	DIODE	IN4003	DIN4003
D12	LED	XC5053R	BLS053R
D13	DIODE	IN4003	DIN4003
X1	SHORTING LINK		Q05LINK
IC1	INT. CIRCUIT	TL071	D071CPX

FS1	FUSE	4A		UM04AQU
FS2	FUSE	4A		UM04AQU
FS3	FUSE	T2A5 220-240V		UM2A5DA
		T5A 110-130V		UM05ADA
L5	MAINS TRANSFORMER			L12362A
L2	CHOKE	3µH		L12405A
L4	CHOKE	22µH		L4T220K
N1	NETWORK			Q05N1AT
N2	NETWORK			Q05N1AT
PL1	AC. POWER IN/FUSEHOLDER		PLUG	PPF12AA
S1	SWITCH			S4050FF
SK2	OUTPUT SOCKETS		RED	PSRS14C
			BLACK	PSBS14C
SK3	INPUT RIGHT			PSPHON2
SK4	INPUT LEFT			PSPHON9
SK5	AC. POWER OUTLET SOCKET			PSP695S